# LPLA NOZZLE LOADS

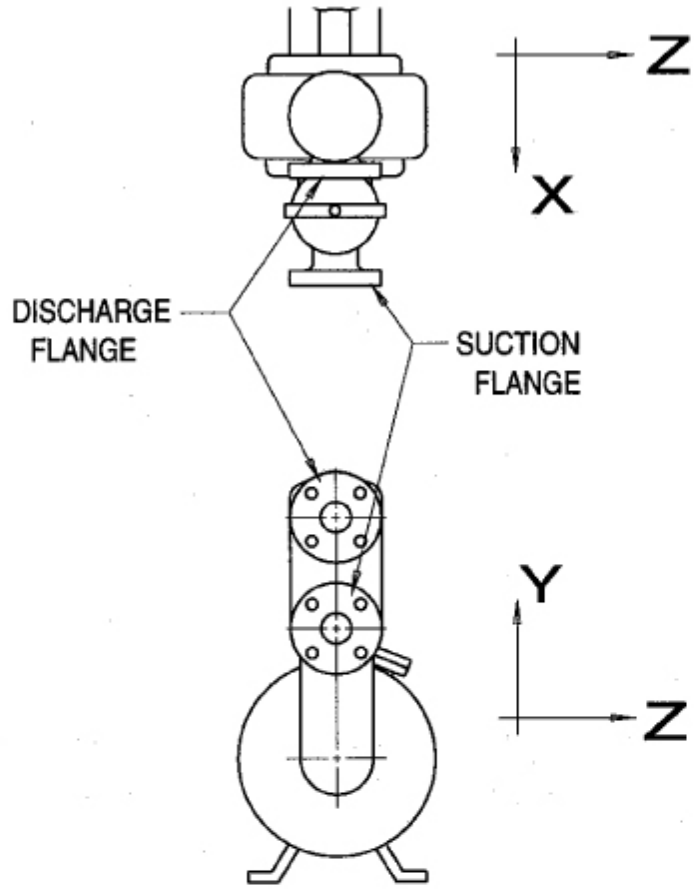


| | SUCTION FLANGE | | | | | | DISCHARGE FLANGE | | | | | |
|---|---|---|---|---|---|---|---|---|---|---|---|---|
| SIZE | FX | FY | FZ | MX | MY | MZ | FX | FY | FZ | MX | MY | MZ |
| 15W | 200 | 130 | 80 | 70 | 260 | 170 | 100 | 60 | 80 | 170 | 130 | 80 |
| 20XW | 300 | 200 | 100 | 100 | 530 | 350 | 150 | 100 | 120 | 350 | 260 | 170 |
| 23XW | 300 | 200 | 100 | 100 | 530 | 350 | 150 | 100 | 120 | 350 | 260 | 170 |

**NOTE:**

1. FX, FY, FZ = MAXIMUM FORCE IN POUNDS.
2. MX, MY, MZ = MAXIMUM MOMENT IN FOOT-POUNDS FOR EACH NOZZLE.
3. WHEN SUMMING MOMENTS, THE MAXIMUM FORCES, GIVEN ABOVE, TIMES THEIR LEVER ARM, MAY BE ADDED TO THE MAXIMUM MOMENTS LISTED.
4. THE LOADS LISTED ABOVE CAN ONLY BE ACHIEVED WHEN THE PUMP IS FREE OF "SOFT FOOT" AND THE HOLD DOWN BOLTS ARE TORQUED TO AT LEAST A GRADE 2 VALUE.

# MAX-LIFE™ SEAL CHAMBER

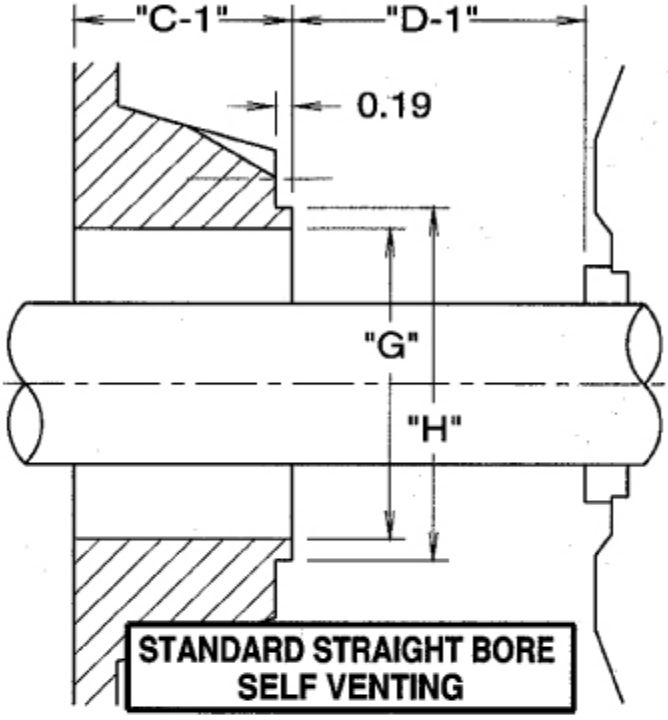


STANDARD STRAIGHT BORE
SELF VENTING

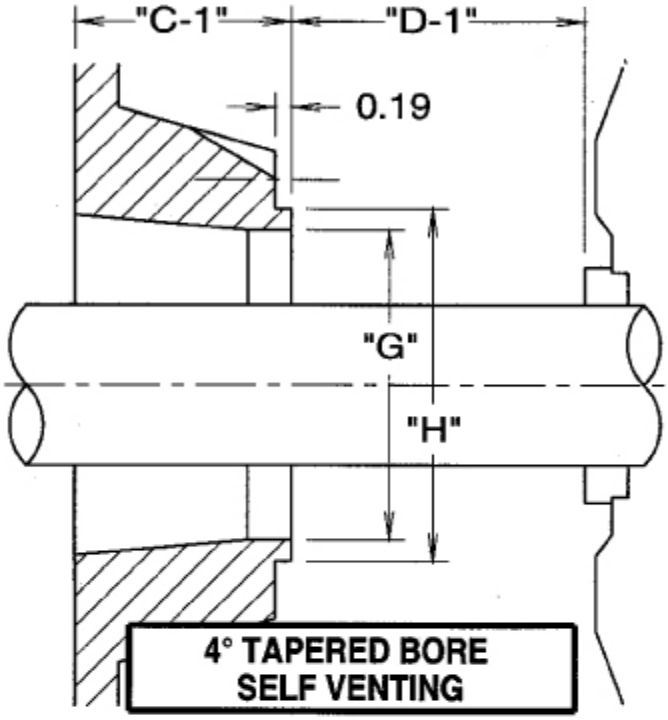


4° TAPERED BORE
SELF VENTING

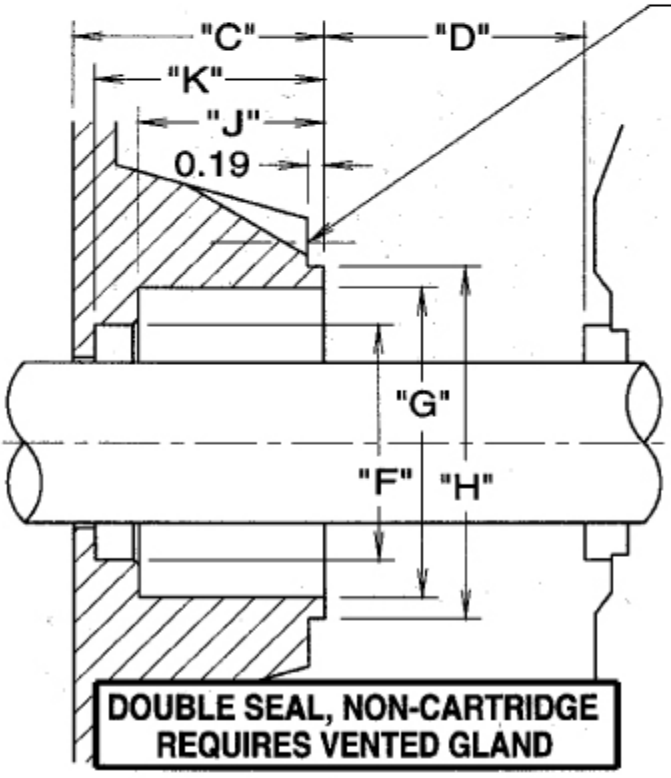


(4) "A" STUDS EQ SPACED
ON "B" BOLT CIRCLE
STRADDLING CENTERLINES

| DIM | TOL | SHAFT DIA +/- 0.001 | | |
|---|---|---|---|---|
| | | Ø1.125 | Ø1.375 | Ø1.875 |
| "A" | NOMINAL | 3/8-16 | 3/8-16 | 1/2-13 |
| "B" | +/- 0.03 | Ø3.75 | Ø4.50 | Ø5.00 |
| "C" | +/- 0.02 | 2.44 | 2.44 | 2.87 |
| "C-1' | +/- 0.02 | 2.00 | 2.00 | 2.50 |
| "D" | +/- 0.03 | 1.75 | 1.75 | 2.93 |
| "D-1' | +/- 0.03 | 2.19 | 2.13 | 3.31 |
| "F" | +0.002 | Ø1.750 | Ø2.000 | Ø2.625 |
| "G" | +0.002 | Ø2.625 | Ø2.875 | Ø3.625 |
| "H" | -0.002 | Ø3.125 | Ø3.597 | Ø4.125 |
| "J" | +/- 0.02 | 1.75 | 1.72 | 2.13 |
| "K" | +/- 0.02 | 2.19 | 2.19 | 2.63 |

DOUBLE SEAL, NON-CARTRIDGE
REQUIRES VENTED GLAND

# VIBRATION MONITORING

## 1 VIBRATION & PREDICTIVE MAINTENANCE

Vibration Monitoring should be part of a Structured Predictive Failure Analysis Program. Early detection of pump problems is desirable, when damage is minor, so equipment is analyzed on-line for diagnosis. Mechanical problems are determined before catastrophic failure; therefore, maintenance can be scheduled at a time that is convenient. The result of a good Predictive Maintenance Program is reduced downtime, reduced maintenance costs, prevention of secondary damage and improved plant safety.

A Predictive Maintenance Program is specifically tailored to the user's needs; as a result, programs and monitoring equipment vary from user to user. Therefore, we can only offer simple guidelines for vibration monitoring. Ultimately, the success of the program relies on the expertise of the user.

## 2 MONITORING SCHEDULES

Pumps should be monitored in accordance with a prescribed schedule where vibration levels are recorded on an equipment data sheet to establishing a history of the unit's condition. A trend of increasing vibration level is a sign of developing mechanical problems. These increases are compared to a baseline reading and maintenance is schedule at a predetermined vibration increase. A graph showing vibration trend VS monitoring date is a very useful analysis tool.

The baseline vibration level is the vibration of the unit while it is operating in good condition, without cavitation, with good coupling alignment, without undo pipe strains, and with straight suction piping to the casing for uniform flow. If previous vibration history is unavailable, a baseline reading can be determined from a similar unit operating in good condition, or the factory can be consulted for a baseline value taken when the pump was tested before shipment.

Monitoring schedules are predetermined by the program administrator and will vary by application and useful failure detection period. This period is based on the time between confirmation of a machine problem and catastrophic failure.

Pumps that are in a very critical or hazardous service should be considered for a continuous monitoring system that will shut down or alarm at the predetermined vibration level increase.

## 3 SCHEDULED MAINTENANCE

Maintenance should be scheduled at a predetermined vibration level increase above the baseline value. This level is determined by the user and will vary, depending on the application.

As a general rule, maintenance should be scheduled when:

1. Vibration exceeds twice the baseline value.
2. Vibration level exceeds 0.20 in/sec.

## 4 MEASURING PROCEDURE

1. Connect the pickup (accelerometer). The pickup should be placed on a rigid part of the pump where it can be securely held, typically in a horizontal/radial position on the bearing housing. The pickup must be connected at the same location each time the pump is monitored. This location should be illustrated on the data sheet and/or physically marked on the pump.

2. Check the operating conditions. The pump vibration will vary at different points along the pump performance curve, so the pump head and capacity should be at the design or baseline condition each time the unit is monitored.

3. Take a reading. Turn the vibration analyzer to the Velocity (in/sec) setting and set to an appropriate scale (the lowest setting that will read full amplitude). Make a spectrum plot and mark the maximum velocity on the pump data sheet.

4. Check results. Compare vibration readings to the baseline reading and previous readings. It is useful to have a trend chart that shows changes in vibration level with respect to monitoring dates.

### VIBRATION LIMITS

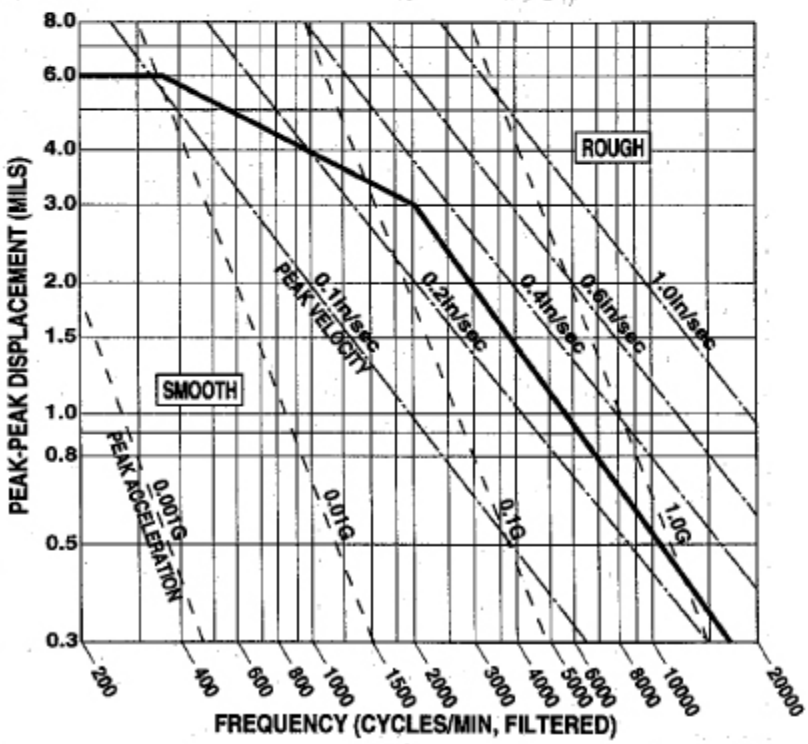

PEERLESS PUMP LaBour Taber

# ANSI B16.5 & B16.42 FLANGES

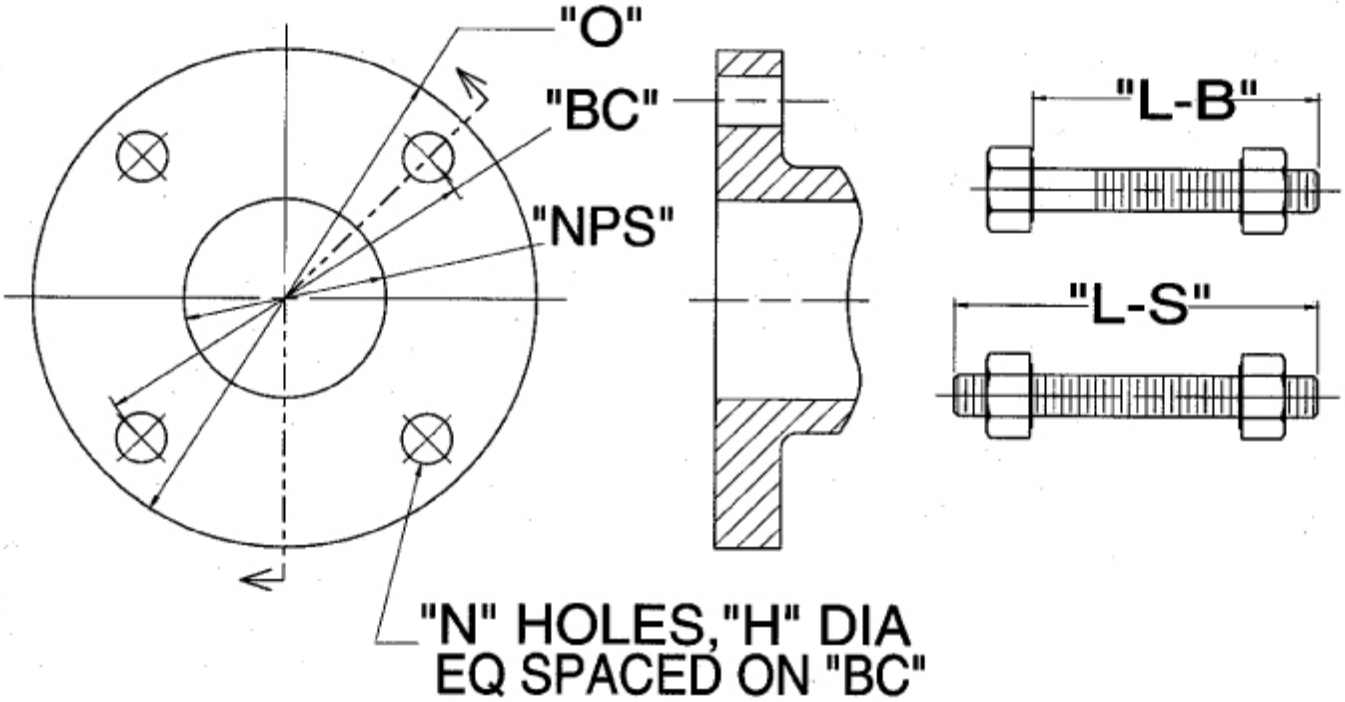


| NOM. PIPE SIZE | 150 - LB FLANGE | | | | | | | 300 - LB FLANGE | | | | | | |
|---|---|---|---|---|---|---|---|---|---|---|---|---|---|---|
| | "H" DRILL THRU | "N" # OF HOLES | "O" DIA REF | "BC" DIA +/-.02" | BOLT DIA | "L-B" | "L-S" | "H" DRILL THRU | "N" # OF HOLES | "O" DIA REF | "BC" DIA +/-.02" | BOLT DIA | "L-B" | "L-S" |
| 0.50 | 0.62 | 4 | 3.50 | 2.38 | 0.500 | 2.00 | 2.50 | 0.62 | 4 | 3.75 | 2.62 | 0.500 | 2.00 | 2.50 |
| 0.75 | 0.62 | 4 | 3.88 | 2.75 | 0.500 | 2.25 | 2.50 | 0.75 | 4 | 4.62 | 3.25 | 0.625 | 2.50 | 2.75 |
| 1.0 | 0.62 | 4 | 4.25 | 3.12 | 0.500 | 2.25 | 2.75 | 0.75 | 4 | 4.88 | 3.50 | 0.625 | 2.50 | 3.00 |
| 1.25 | 0.62 | 4 | 4.62 | 3.50 | 0.500 | 2.50 | 2.75 | 0.75 | 4 | 5.25 | 3.88 | 0.625 | 2.75 | 3.00 |
| 1.5 | 0.62 | 4 | 5.00 | 3.88 | 0.500 | 2.50 | 3.00 | 0.88 | 4 | 6.12 | 4.50 | 0.750 | 3.00 | 3.50 |
| 2.0 | 0.75 | 4 | 6.00 | 4.75 | 0.625 | 2.75 | 3.25 | 0.75 | 8 | 6.50 | 5.00 | 0.625 | 3.00 | 3.25 |
| 2.5 | 0.75 | 4 | 7.00 | 5.50 | 0.625 | 3.00 | 3.50 | 0.88 | 8 | 7.50 | 5.88 | 0.750 | 3.25 | 3.75 |
| 3.0 | 0.75 | 4 | 7.50 | 6.00 | 0.625 | 3.25 | 3.75 | 0.88 | 8 | 8.25 | 6.62 | 0.750 | 3.50 | 4.00 |
| 3.5 | 0.75 | 8 | 8.50 | 7.00 | 0.625 | 3.25 | 3.75 | 0.88 | 8 | 9.00 | 7.25 | 0.750 | 3.75 | 4.25 |
| 4.0 | 0.75 | 8 | 9.00 | 7.50 | 0.625 | 3.25 | 3.75 | 0.88 | 8 | 10.00 | 7.88 | 0.750 | 3.75 | 4.25 |
| 5.0 | 0.88 | 8 | 10.00 | 8.50 | 0.750 | 3.25 | 4.00 | 0.88 | 8 | 11.00 | 9.25 | 0.750 | 4.00 | 4.50 |
| 6.0 | 0.88 | 8 | 11.00 | 9.50 | 0.750 | 3.50 | 4.00 | 0.88 | 12 | 12.50 | 10.62 | 0.750 | 4.25 | 4.75 |
| 8.0 | 0.88 | 8 | 13.50 | 11.75 | 0.750 | 3.50 | 4.25 | 1.00 | 12 | 15.00 | 13.00 | 0.875 | 4.75 | 5.25 |
| 10.0 | 1.00 | 12 | 16.00 | 14.25 | 0.875 | 4.00 | 4.75 | 1.12 | 16 | 17.50 | 15.25 | 1.000 | 5.25 | 6.00 |
| 12.0 | 1.00 | 12 | 19.00 | 17.00 | 0.875 | 4.25 | 4.75 | 1.25 | 16 | 20.50 | 17.75 | 1.125 | 5.75 | 6.50 |
| 14.0 | 1.12 | 12 | 21.00 | 18.75 | 1.000 | 4.50 | 5.25 | 1.25 | 20 | 23.00 | 20.25 | 1.125 | 6.00 | 6.75 |
| 16.0 | 1.12 | 16 | 23.50 | 21.25 | 1.000 | 4.75 | 5.50 | 1.38 | 20 | 25.50 | 22.50 | 1.250 | 6.50 | 7.25 |
| 18.0 | 1.25 | 16 | 25.00 | 22.75 | 1.125 | 5.00 | 6.00 | 1.38 | 24 | 28.00 | 24.75 | 1.250 | 6.75 | 7.50 |
| 20.0 | 1.25 | 20 | 27.50 | 25.00 | 1.125 | 5.50 | 6.25 | 1.38 | 24 | 30.50 | 27.00 | 1.250 | 7.00 | 8.00 |
| 24.0 | 1.38 | 20 | 32.00 | 29.50 | 1.250 | 6.00 | 7.00 | 1.62 | 24 | 36.00 | 32.00 | 1.500 | 7.75 | 9.00 |

**LaBour** PROCESS PUMPS
ELKHART, IN. 46515

MODEL 10W TYPE LPL
SIZE 2X2-6.88 in 25X25-175 mm
SPEED 1750 rpm _____ max.sphere

IMPELLER NO. 10W8SD-BP
EYE AREA _____ in² _____ mm²
CURVE NO. 10W17

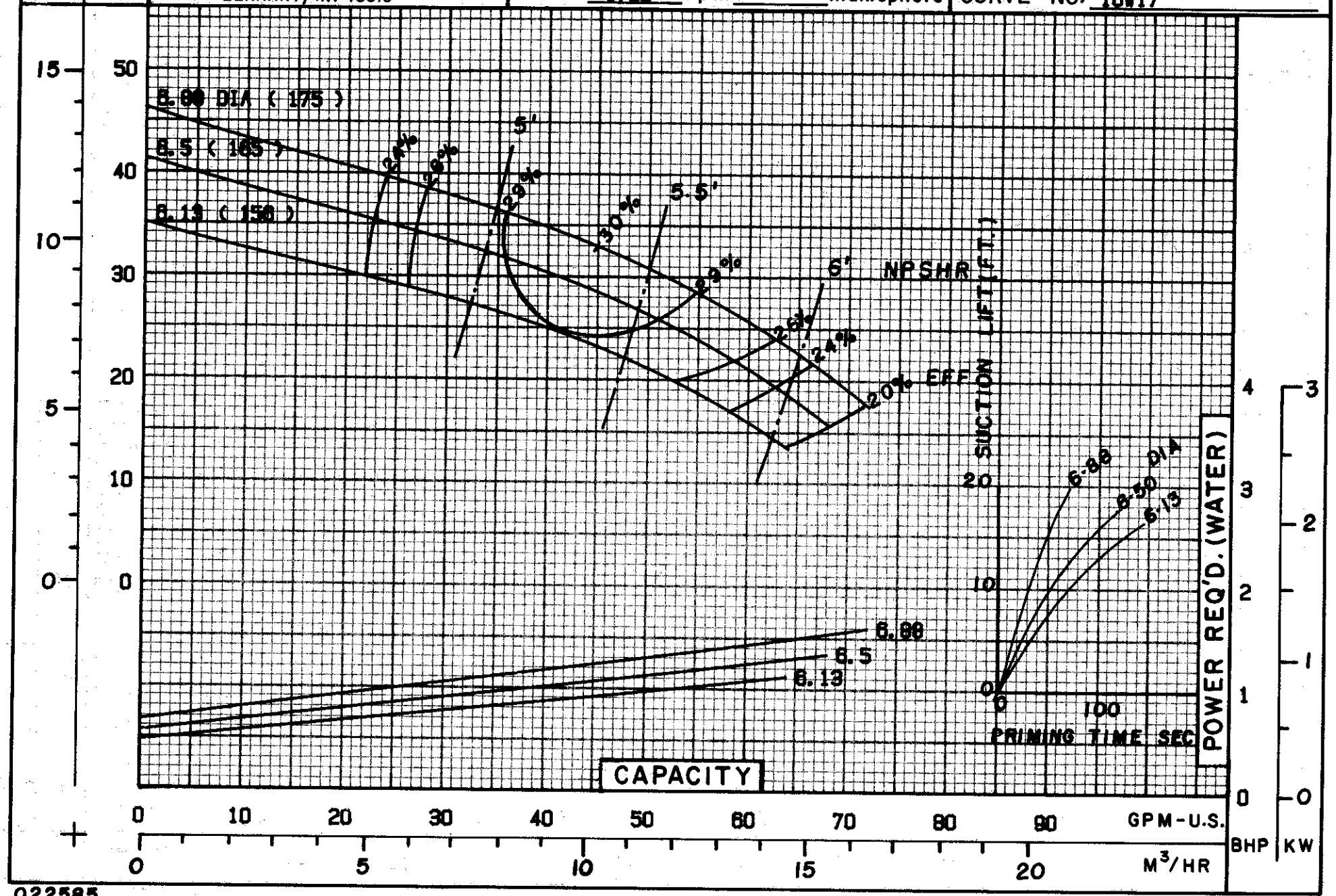


022585

CURVE NO. 10W17

**LaBour** PROCESS PUMPS
ELKHART, IN. 46515

MODEL 10W TYPE LPL
SIZE 2X2-6.88 in 25X25-175 mm
SPEED 3500 rpm _____ max.sphere

IMPELLER NO. 10W8SD-BP
EYE AREA _____ in² _____ mm²
CURVE NO. 10W35

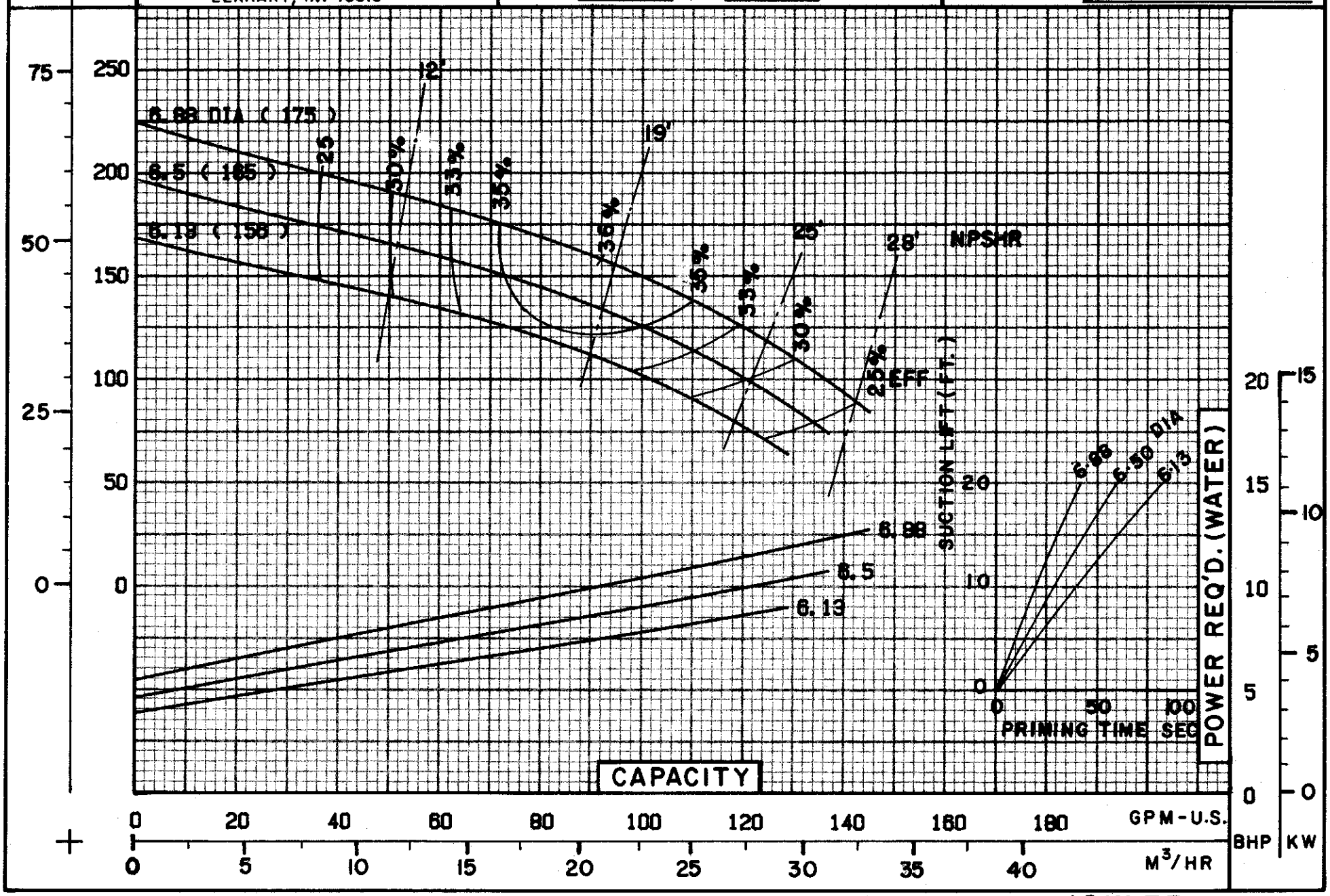


022585

CURVE NO. 10W 35

**LaBour** PROCESS PUMPS
ELKHART, IN. 46515

MODEL 12W TYPE LHL
SIZE 2X2-8.0 in 25X25-203 mm
SPEED 1750 rpm _____ max.sphere

IMPELLER NO. 12W8SD-BP
EYE AREA _____ in² _____ mm²
CURVE NO. 12W17

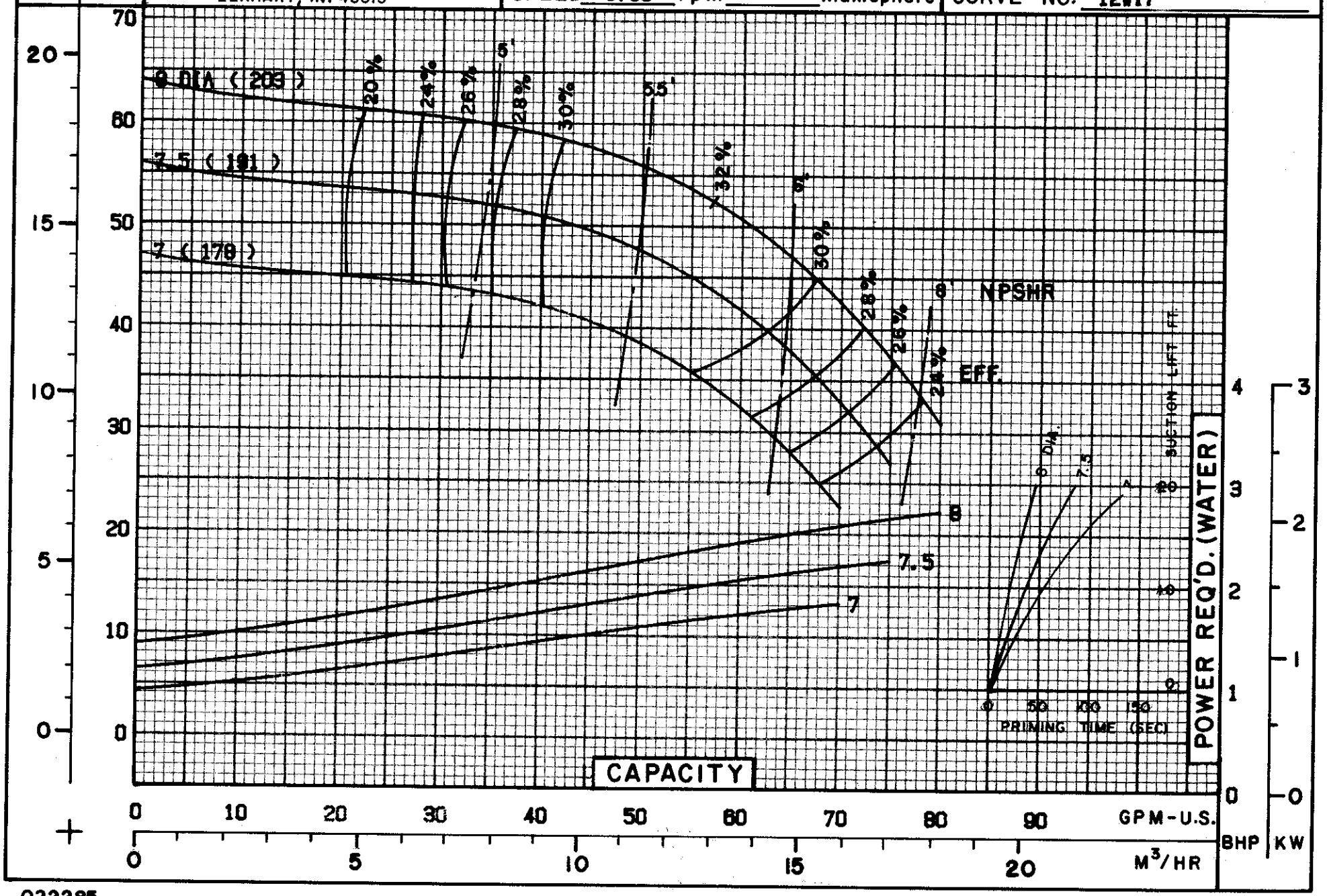


022285

CURVE NO. 12W17

**LaBour** PROCESS PUMPS
ELKHART, IN. 46515

MODEL 12W TYPE LHL
SIZE 2X2-8.0 in 25X25-203 mm
SPEED 3500 rpm _____ max. sphere

IMPELLER NO. 12W8SD-BP
EYE AREA _____ in² _____ mm²
CURVE NO. 12W-35

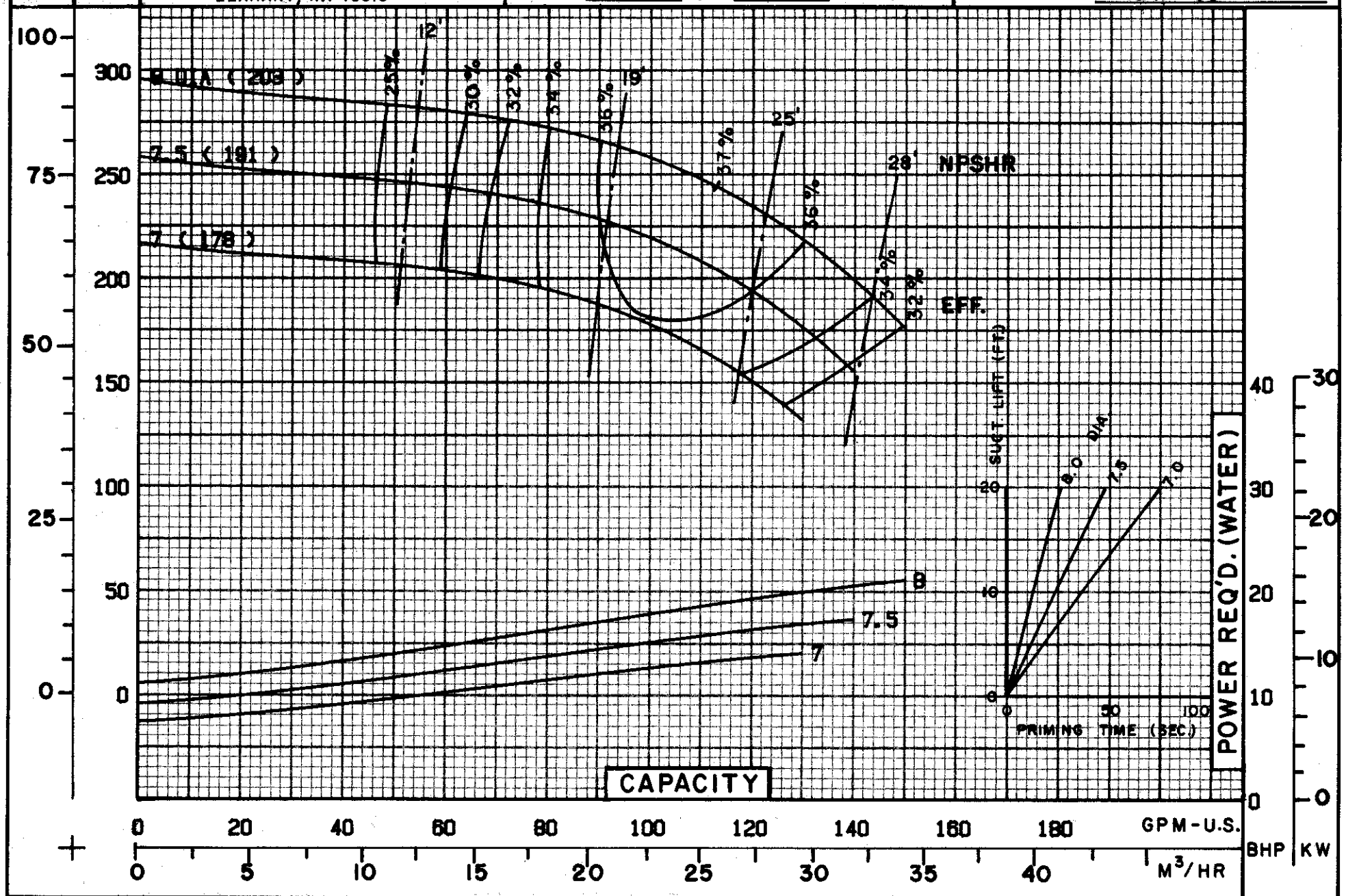


021985

CURVE NO. 12W-35

**LaBour** PROCESS PUMPS
ELKHART, IN. 46515

MODEL 15W TYPE LPL
SIZE 2.5X2.5-8.38 in 64X64-213 mm
SPEED 1150 rpm _____ max.sphere

IMPELLER NO. 15W-8SDBP
EYE AREA _____ in² _____ mm²
CURVE NO. 15W11-A

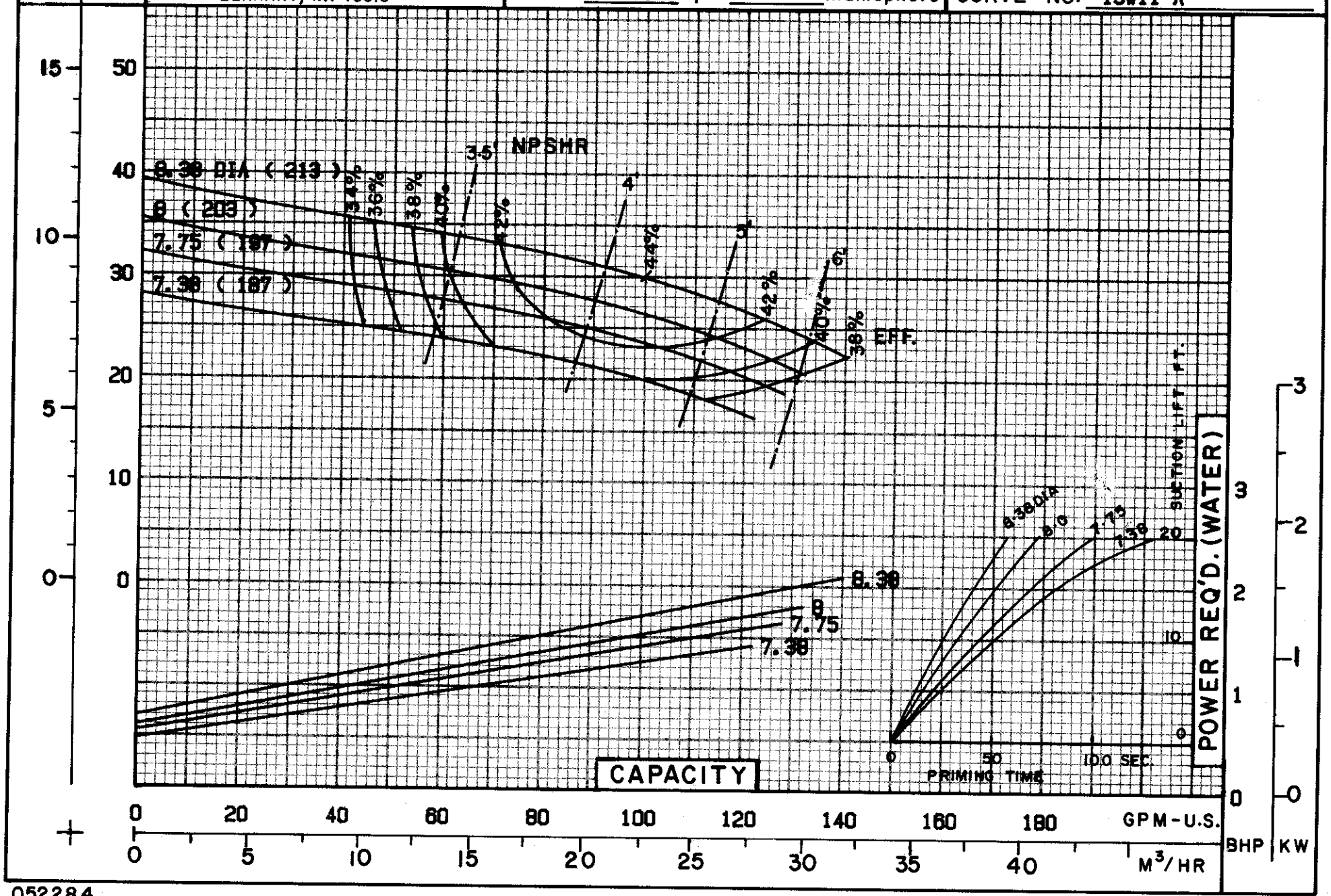


052284

CURVE NO. 15W11-A

**LaBour** PROCESS PUMPS
ELKHART, IN. 46515

MODEL 15W TYPE LPL
SIZE 2.5X2.5-8.38 in 64X64-213 mm
SPEED 1750 rpm _____ max.sphere

IMPELLER NO. 15W-8SDBP
EYE AREA _____ in² _____ mm²
CURVE NO. 15W17-A

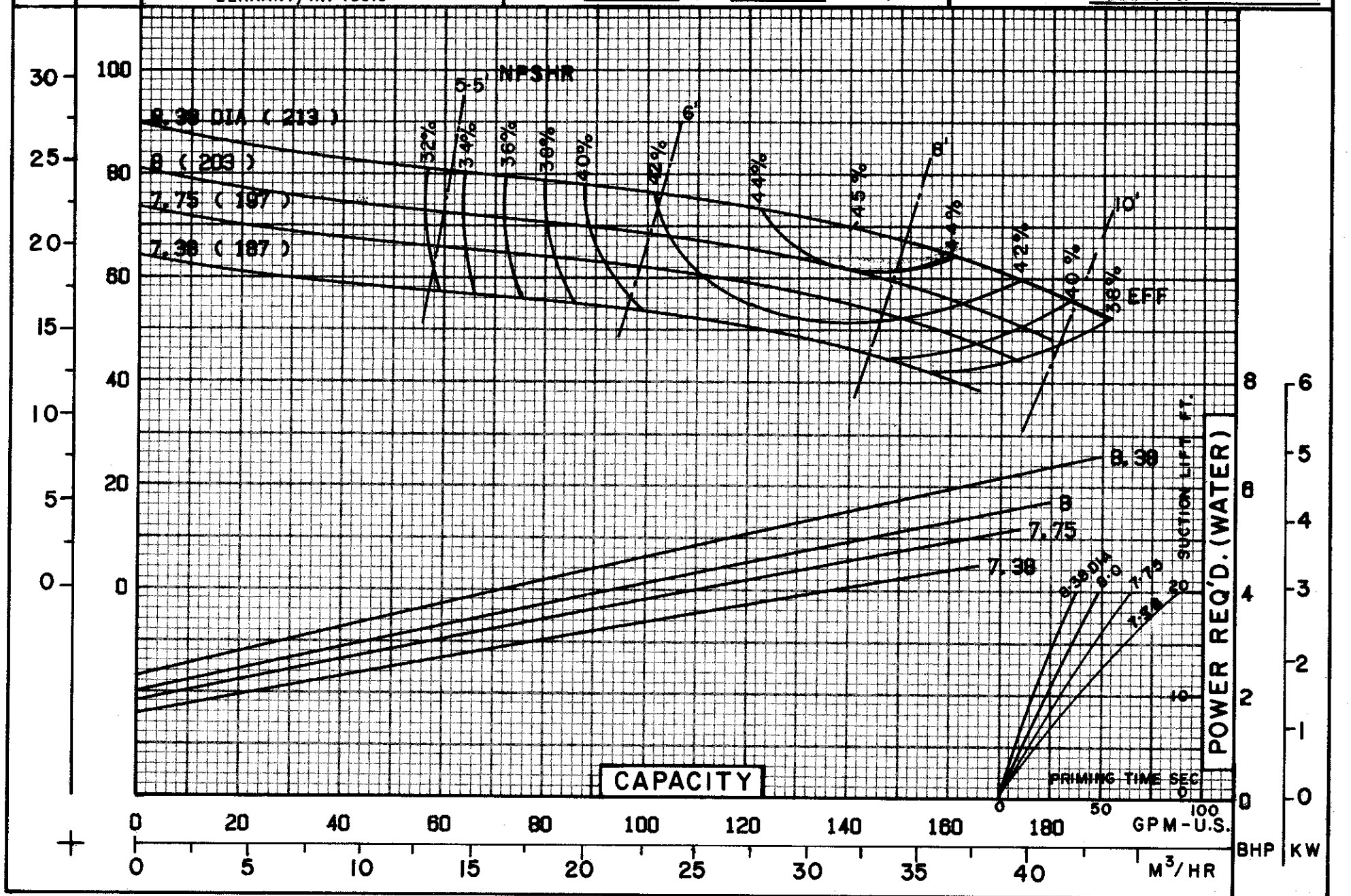


052384

CURVE NO. 15W17-A

**LaBour** PROCESS PUMPS
ELKHART, IN. 46515

MODEL 20XW TYPE LPL
SIZE 3X3-9.38 in 76X76-238 mm
SPEED 1150 rpm _____ max.sphere

IMPELLER NO. 20XW8SD-BP
EYE AREA _____ in² _____ mm²
CURVE NO. 20XW-12

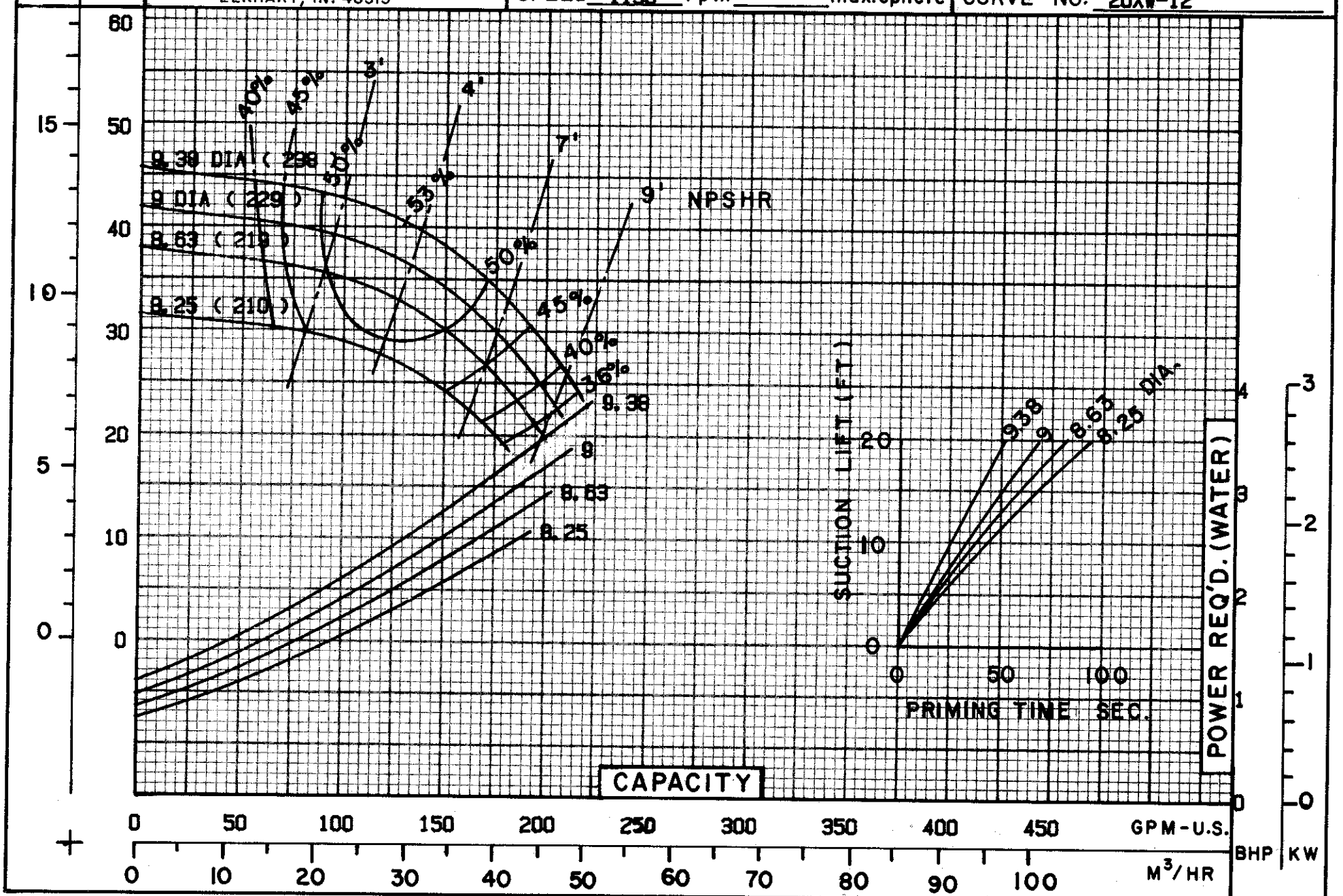


CURVE NO. 20XW-12

**LaBour** PROCESS PUMPS
ELKHART, IN. 46515

MODEL 20XW TYPE LPL
SIZE 3X3-9.38 in 76X76-238 mm
SPEED 1750 rpm _____ max.sphere

IMPELLER NO. 20XW6SD-BP
EYE AREA _____ in² _____ mm²
CURVE NO. 20XW17

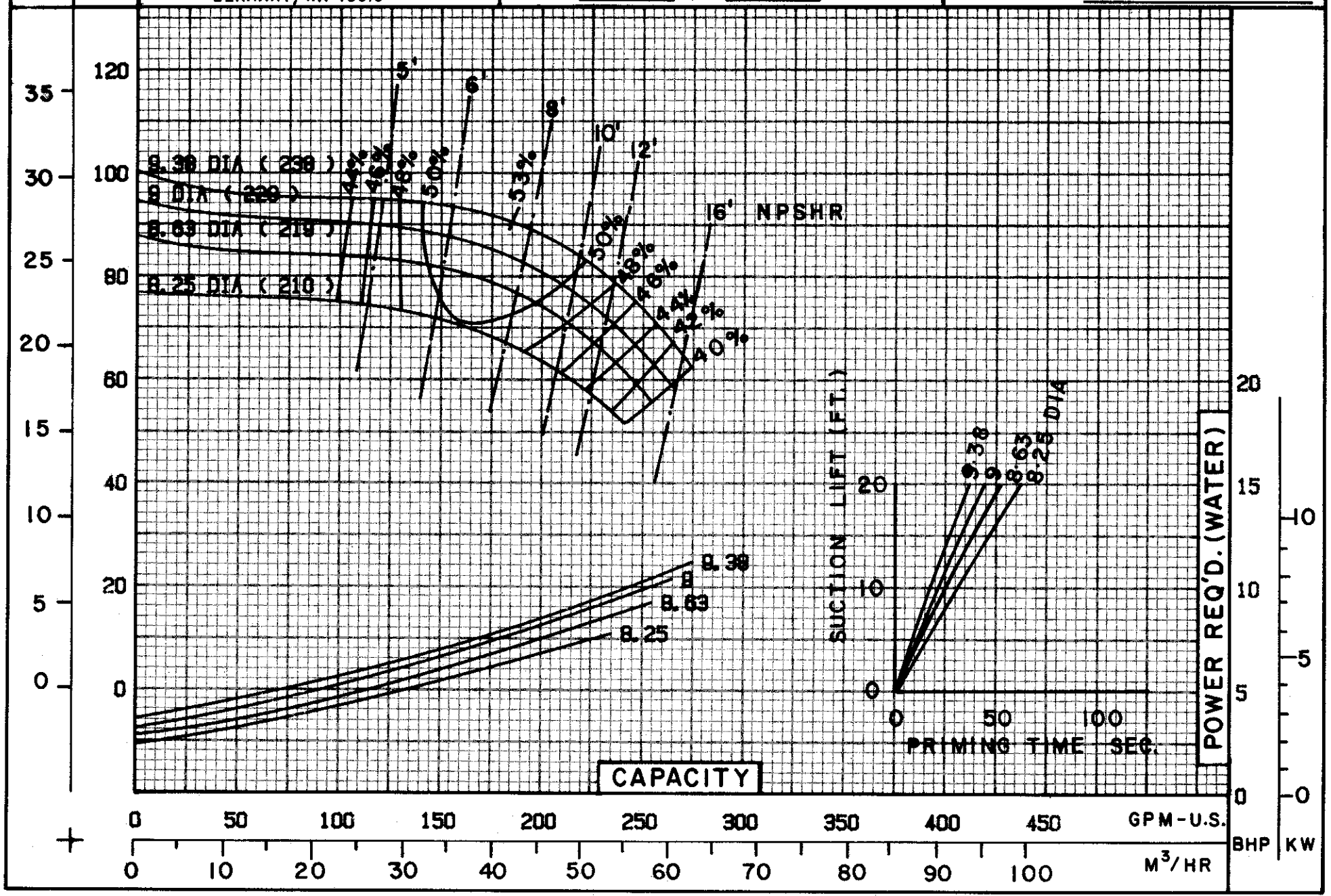


CURVE NO. 20XW-17

**LaBour** PROCESS PUMPS
ELKHART, IN. 46515

MODEL 23XW TYPE LPL
SIZE 3X3-10.0 in 76X76-254 mm
SPEED 1150 rpm _____ max.sphere

IMPELLER NO. 23XW8SD-BP
EYE AREA _____ in² _____ mm²
CURVE NO. 23XW11

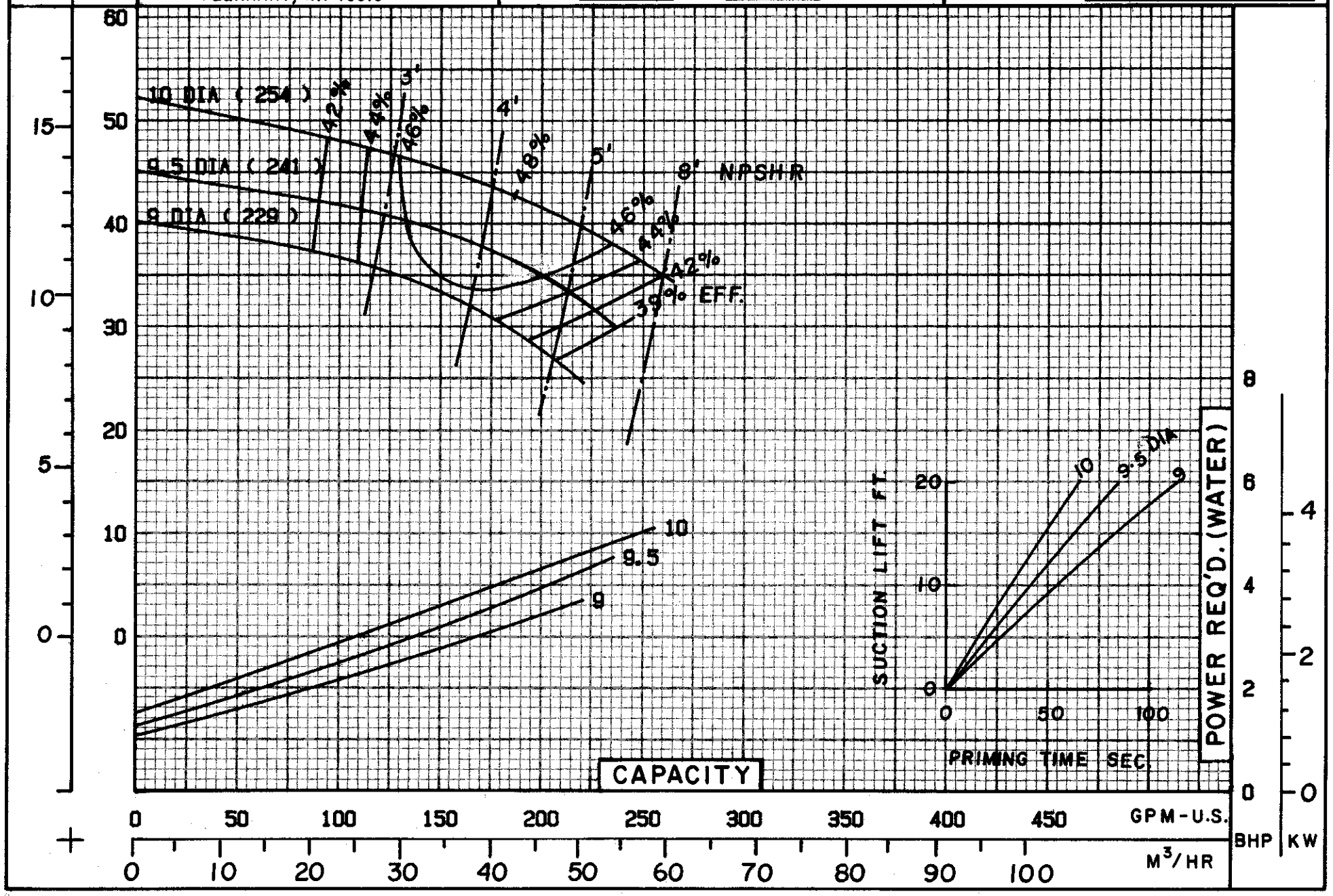


060385

23XW11

**LaBour** PROCESS PUMPS
ELKHART, IN. 46515

MODEL 23XW TYPE LPL
SIZE 3X3-10.0 in 76X76-254 mm
SPEED 1750 rpm _____ max.sphere

IMPELLER NO. 23XW8SD-BP
EYE AREA _____ in² _____ mm²
CURVE NO. 23XW17

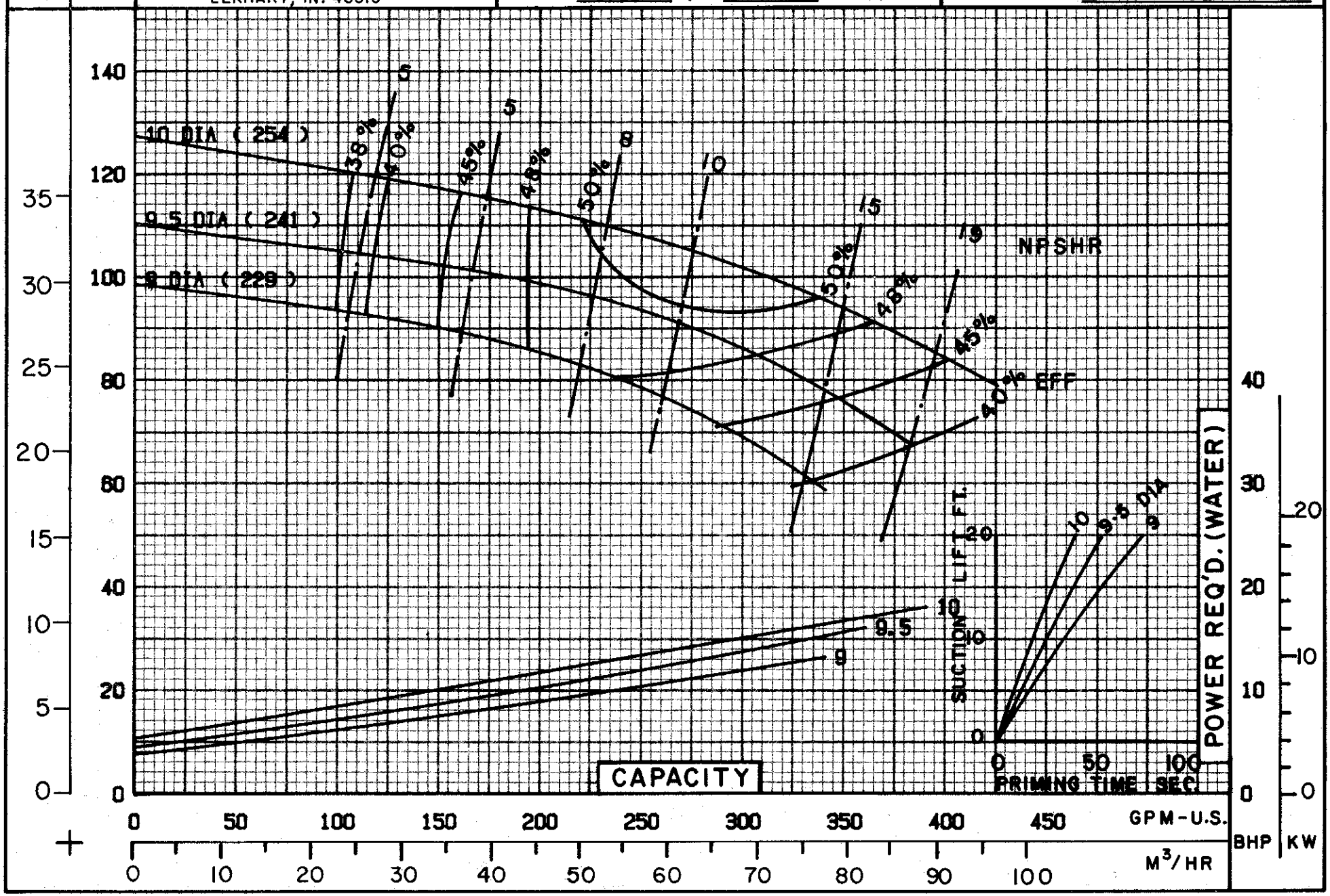


050285

23XW17

**Peerless Pump Company**
2005 Dr. Martin Luther King Jr. Street
Indianapolis, IN 46202
Phone: (317) 925-9661 • Fax: (317) 924-7388

www.peerlesspump.com

The content of this brochure is subject to change without notice.
Brochure LHLA - LPLA, 10/2004

©2004 Peerless Pump Company