REPAIR INSTRUCTIONS

TYPE BT PUMPS

Read this entire bulletin

before attempting to repair this pump. For installation and operation refer to instruction bulletin 2880549. Properly installed, your Peerless pump will give you satisfactory, dependable service. We urge you to carefully read these detailed instructions to properly repair your pump.

Failure to read and comply with installation and operating instructions will void the responsibility of the manufacturer and may also result in bodily injury as well as property damage.

This bulletin is intended to be a permanent part of your pump installation and should be preserved in a convenient location for ready reference. If these instructions should become soiled, obtain a new copy from Sterling Fluid Systems (USA), Inc. Include pump model and/or serial number with your request.

Many models have suffix letters in the model number. When ordering repair parts, provide the complete model number including suffix letters and the pump serial number which are stamped on the pump nameplate.

WARRANTY

New equipment manufactured by Seller is warranted to be free from defects in material and workmanship under normal use and service for a period of one year from the date of shipment. Seller's obligation under this warranty is limited to repairing or replacing at its option any part found to its satisfaction to be so defective provided that such part is, upon request, returned to Seller's factory from which it was shipped, transportation prepaid. This warranty does not cover parts damaged by decomposition from chemical action or wear caused by abrasive materials, nor does it cover damage resulting from misuse, accident, neglect, or from improper operation, maintenance, installation, modification or adjustment. This warranty does not cover parts repaired outside Seller's factory without prior written approval. Seller makes no warranty as to starting equipment, electrical apparatus or other material not of its manufacture, since the same are usually covered by warranties of the respective manufacturers thereof.

In the event, notwithstanding the terms of this agreement, it is determined by a court of competent jurisdiction that an express warranty has been given by Seller to Purchaser with respect to the head, capacity or other like performance characteristic of said equipment, Seller's liability for breach of the same shall be limited to accepting return of such equipment F.O.B. plant of manufacture, refunding any amount paid thereon by Purchaser (less depreciation at the rate of 15% per year if Purchaser has used equipment for more than thirty (30) days and canceling any balance still owing on the equipment.

THIS WARRANTY IS EXPRESSLY IN LIEU OF ANY OTHER WARRANTIES, EXPRESSED OR IMPLIED, AND SELLER SPECIFICALLY DISCLAIMS ANY IMPLIED WARRANTY OF MERCHANTABILITY OR FITNESS FOR A PARTICULAR PURPOSE.

PEERLESS PUMP® LaBour Taber

Peerless Pump Company
2005 Dr. Martin Luther King Jr. Street
Indianapolis, IN 46202
Phone: (317) 925-9661 • Fax: (317) 924-7388

4853854

WARNING

Do not operate this pump at any pressure, flow rate, or liquid temperature other than those for which the pump was originally purchased. Do no pump any other liquid than the one for which the pump was originally purchased without the consent of Sterling Fluid Systems (USA), Inc. or its authorized representatives. Disregard of this warning can result in pump failure and serious personal injury or death.

SECTION -- DISASSEMBLY

Before starting disassembly of the pump, it is recommended that a spare parts kit as described on page 7 be obtained. Sterling Fluid Systems (USA), Inc. does not recommend reuse of gaskets, O-rings, mechanical seals, or ball bearings.

Shut down pump. Disconnect power to the pump driver before starting any repairs. Refer to Bulletin No. 2880549 for procedure to follow.

WARNING

1-1. Disengage the coupling halves. Refer to the coupling manufacturers' instructions.

1-2. PUMP (See Figure 1.) Disassemble pump to the extent required as follows:

a. Remove all cap screws from the upper casing (1B) and from the bearings (16 & 18).

b. Attach hoist to customer-furnished eye bolt in upper casing. Use eye bolt to lift upper casing only. Eye bolt must have 1/2 -13 UNC external thread.

c. Place slings around the shaft near the bearings and lift rotating element from lower casing (1A).

d. Place rotating element in a convenient work place.

1-3. ROTATING ELEMENT. Disassemble in the following manner:

a. Loosen set screws and remove the coupling half. Tap from the back of the hub or use a puller. Remove coupling key (46).
b. Loosen set screws holding the inner race of the bearings to the shaft and remove bearings (16 & 18).

c. Remove the glands (17) including the gland O rings (119B) and the stationary seal seats (65).
d. Remove the mechanical seal rotating elements (80).

e. Remove casing rings (7). On many pumps this may be done before removing the coupling half.

f. Remove impeller retaining rings (2A), impeller (2), and impeller key (32) from shaft (6).

1-4. CLEANING. Clean all metal parts (except bearings) with a solvent. Use a bristle brush (NOT metal or wire) to remove tightly adhering deposits. A fiber scraper may be used to remove the gasket from casing flanges. Blow dry with clean dry compressed air.
Sterling Fluid Systems (USA), Inc. does not recommend reuse of ball bearings.

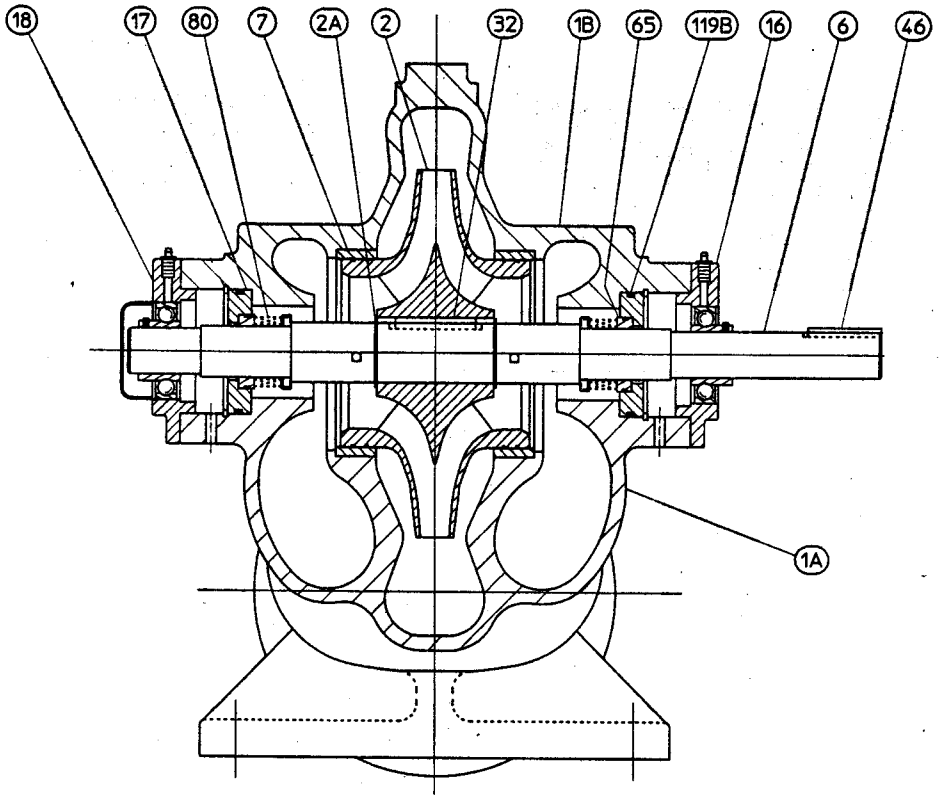

Item No.	Description	Item No.	Description
1A 1B	Lower Casing Upper Casing	18	Outboard Ball Bearing
2	Impeller	32	Impeller Key
2A	Impeller Retaining Ring	46	Coupling Key
6	Shaft	65	Mechanical Seal Stationary Element
7	Casing Ring	73A	Casing Gasket (Not Shown)
16	Inboard Ball Bearing	80	Mechanical Seal Rotating Element
17	Gland	119B	Gland O-ring

FIGURE 1

SECTION II -- INSPECTION AND REPAIR

2-1. INSPECTION. Visually inspect parts for damage affecting serviceability or sealing. Emphasize inspection of mating parts having relative motion – wear rings and mechanical seal faces. Perform detailed inspection as follows:

a. Check all O-rings for cracks, nicks or tears. Replace if defective in any way.

b. Mount the shaft between centers or on V-blocks. Check for eccentricity throughout entire length with a dial indicator. Eccentricity must not exceed 0.003 inch total indicator reading. Surfaces on which bearings mount must be smooth and have a finish of 32 microinches or better.

c. Measure the OD of the impeller wear surfaces and the ID of the casing rings (7). Compute the diametrical clearance (ID minus OD) and compare with the limits given in Table I. If measured diametrical clearance exceeds two times the value in Table I, repair to restore design clearance is recommended. ID surface of casing ring must be smooth and concentric with ring OD.

d. Examine impeller passages for cracks, dents, gouges or embedded material.

e. Examine the mechanical seal for wear at the seal faces and for damage to the bellows. Replace the complete seal if cracking or hardening of the bellows is evident, or if the lapped seal faces are cracked, nicked or scored.

2-2. REPAIR. Make needed repairs in the following manner:

a. If ID of casing rings (7) is grooved, scored or eccentric, replace the casing rings.

b. If impeller wear surfaces are defective, the impeller skirts must be machined to install new impeller rings. Machine to the diameter shown in column B of Table I. Machining must be concentric with impeller bore. The I.D. of factory supplied impeller rings is machined for a shrink fit to the impeller.

c. Straighten or replace shafts having excessive run-out (eccentricity). See paragraph 2-1b.

TABLE I

PUMP MODEL	A IMPELLER/CASE RING DIAMETRICAL CLEARANCE	B IMPELLER SKIRT DIAMETER FOR RING INSTALLATION
2BT11	.015/.019 inches	4.741/4.739 inches
3BT9	.015/.019 inches	4.382/4.380 inches
3BT9G	.015/.019 inches	4.382/4.380 inches
4BT10	.015/.019 inches	4.741/4.739 inches
4BT10G	.015/.019 inches	4.382/4.380 inches
4BT11	.015/.019 inches	5.366/5.364 inches
4BT11G	.015/.019 inches	4.828/4.826 inches
4BT12	.015/.019 inches	4.741/4.739 inches
6BT11	.015/.019 inches	5.616/5.614 inches
6BT14	.015/.019 inches	6.117/6.115 inches
6BT14G	.015/.019 inches	6.117/6.115 inches
8BT12	.015/.019 inches	6.492/6.490 inches
8BT15	.015/.019 inches	8.369/8.367 inches
8BT15G	.015/.019 inches	7.118/7.116 inches
10BT12	.015/.019 inches	7.868/7.866 inches
10BT14A	.015/.019 inches	9.263/9.261 inches
10BT14J	.015/.019 inches	9.263/9.261 inches

TABLE II

TORQUE VALUE (lb.-ft.)*	
SIZE INCH	MEDIUM CARBON STEEL SAE J429 GRADE 5 105-120,000 PSI TENSILE
1/4	7-8
3/8	23-25
1/2	59-62
5/8	120-125
3/4	210-225
7/8	305-325
1	421-465
HEAD SYMBOL	

* TORQUE VALUES SHOWN ARE FOR CLEAN LUBRICATED THREADS, AND GASKETED JOINTS.

SECTION III -- REASSEMBLY

3-1. ROTATING ELEMENT. (See Figure 1) Reassemble as follows:

a. Coat the shaft (6) lightly with oil.

b. Place impeller key (32) in shaft keyway and one impeller retaining ring (2A) in groove in shaft.
c. Align impeller (2) on shaft and install with an arbor press or brass tubular sleeve and hammer until impeller hub contacts the impeller retaining ring. Install the second impeller retaining ring (2A). Guard against bending shaft. When assembled, the impeller vanes must rotate in the proper direction, (See Figure 3).

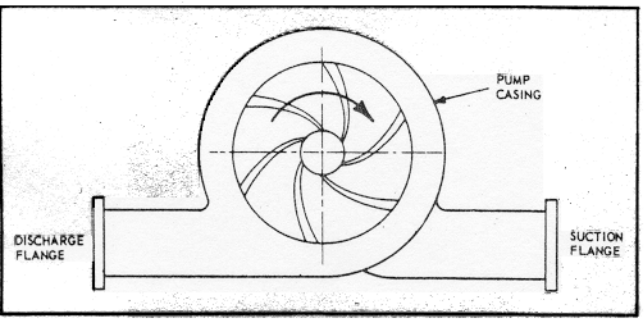

FIGURE 3. VANE POSITION FOR PROPER ROTATION

d. Locate casing rings (7) on impeller.

e. Lightly lubricate the O.D. of the shaft (6), and install the mechanical seal rotating elements (80) against the shaft shoulders.

f. Lightly lubricate the O-rings on the O.D. of the mechanical seal stationary elements (65), and install stationary elements into glands (17). Install the gland O-rings (119B). Place these assemblies over the shaft.

g Slide bearings (16 & 18) onto the shaft but do not tighten bearing set screws at this time.

h. Install coupling key (46); and assemble coupling half on the shaft and tighten the setscrews.

3-2. PUMP. Complete the assembly of pump as follows:

a. Use factory supplied casing gasket (73A) or use the upper casing (1B) as a template to cut a casing gasket (73A) from 1/64 inch Vellumoid (SAE P3313B). It is very important that specified material and thickness be used for casing gasket. Machined surfaces of both casings must be perfectly clean and free from burrs and nicks.

b. Affix the new casing gasket to lower casing (1A). Trim the gasket carefully with a sharp knife. The casing gasket must seal against the gland O-ring (119B).

c. Set the rotating element into lower casing. Position the casing rings (7) so that the dowel pins engage in slots in the lower case split surface.

d. Center the shaft in the lower case so that the dimension from the shaft shoulder at the mechanical seal (80) to the end of the lower casing (1A) is the same at each end of the pump.

e. Install and tighten the two cap screws attaching the outboard bearing (18) to the lower case (1A).

f. Tighten the set screws holding the inner race of the outboard bearing (18) to the shaft (6). Replace the protective cap which covers the outboard end of the shaft.

g. Carefully locate the upper casing on the lower and install the two dowel pins. Install and tighten the cap screws working from the center of the casing to each end. Tighten to the torque values in Table II. If any cap screws require replacement, use only parts with equal or greater tensile strength. Rotate shaft by hand to check that it turns freely.

h. Replace all plugs removed during disassembly.

i. Lubricate the bearings.

NOTE

It is very important to provide proper lubrication and to keep bearings clean. Frequency of lubrication must be determined by experience, as it depends upon bearing size, speed, operating conditions and environment. Table III should be used only as a guide for relubrication.

TABLE III
GREASING FREQUENCY

SERVICE	GREASE EACH
Normal, 8-hour day operation. Room free of dust and damaging atmosphere.	6 Months
Severe, 24-hour day operation. Room with moderate dust and/or damaging atmosphere, or outdoor service.	1 Month
Light, approximately 10-hour week. Room relatively free of dust and damaging atmosphere.	1 Year

GREASE SPECIFICATION:
Use Lithium soap base, worked penetration, meeting NLGI Grade 2 specifications. Minimum dropping point 355° F., operating temperature range of -10° F to 240° F. Obtain grease from your local supplier.

j. Consult the driver manufacturer's instructions for lubricants and relubrication procedures for the driver bearings.

3-3. TROUBLES. To reliably establish the performance of either the pump or driver, instruments such as tachometers, pressure gauges and electric meters must be in proper working condition and preferably of recent calibration. In many cases, much time and expense have been expended with faulty instruments. Table IV lists a number of troubles commonly occurring. If unable to determine the cause and correct the trouble from the list, refer the problem to the Sterling Fluid Systems (USA), Inc. representative.

TABLE IV
TROUBLES

TROUBLE	PROBABLE CAUSE	REMEDY
Failure to deliver liquid or sufficient pressure	Pump not primed.	Reprime.
	Pump not up to speed.	Check for low motor voltage or motor over- load. Other drives, increase driver speed when possible.
	System discharge head too high.	Check to see that all discharge valves are opened and the discharge line is free from obstructions. In some cases, the installation has to be altered or a pump of suitable rating must be provided.
	Insufficient available NPSH.	Check NPSH requirements of pump and increase system NPSH accordingly.
	Incorrect direction of rotation.	Check the impeller assembly for correct rotation either by removing upper case or through priming connection. Check rotation of driver.
	Air leaks in suction line or through stuffing boxes.	Check mechanical seal. Check for air leak between gland and stuffing box bore. Check all suction line joints for bad gaskets or loose bolting.
	Impeller passages restricted.	Disassemble the pump and clean impeller.
	Worn wearing rings.	Replace worn parts.
	Damaged impeller.	Replace or repair impeller.
	Foot valve too small or restricted by dirt.	Replace with adequate size foot valve or clean foot valve.
Pump loses prime after starting	Air leaks in suction line, or thru stuffing boxes.	Check mechanical seal. Check for air leak between gland and stuffing box bore. Check all suction line joints for bad gaskets or loose bolting.
	Insufficient available NPSH.	Check NPSH requirements of the pump and increase the system available NPSH accordingly.

TABLE IV (CONTINUED)
TROUBLES

TROUBLE	PROBABLE CAUSE	REMEDY
Overload on driver	Pump speed high.	Motor voltage higher than name plate rating will cause the motor to run faster. Either reduce supply voltage or trim impeller diameter. On other drives, reduce speed if possible. If speed reduction is not possible, trim impeller diameter.**
	Total head lower than rating.	Check suction and discharge pressures and determine the total head (TH). If TH lower than rating, throttle discharge to rated TH or, if this is not possible, reduce impeller diameter.**
	Liquid is of higher specific gravity or viscosity than rating.	Check with Sterling distributor to determine if a larger motor is required.
	Mechanical trouble with pump or driver.	See if pump and motor turn freely. Check impeller fit, shaft straightness and ball bearings.
Pump vibrates or is noisy	Driver unbalanced.	Disconnect driver and operate it alone. Check pump for large pieces of debris, such as wood, rags, etc.
	Misalignment.	Realign coupling.
	Cracked foundation.	Replace foundation.
	Worn ball bearings.	Replace bearings. Check lubricants for proper grade. Check pump alignment.

**Always obtain new trim diameter from Sterling representative.

SPARE PARTS. To keep delays to a minimum when pump repairs are required, we suggest stocking a spare parts kit which includes the following parts:

(a) One set of mechanical seals (65 & 80).

(b) One square key (impeller) (32).

(c) One square key (coupling) (46).

(d) One set of dowel pins (case ring).

(e) One set of flanges (mechanical seal) (17).

(f) One cartridge ball bearing (inboard) (16) and one cartridge ball bearing (outboard) (18).

(g) One set of snap rings (external, impeller location) (2A).

(h) One set of O-ring gaskets (mechanical seal flange) (119B).

(i) One case gasket.

For installations where downtime is critical, a complete rotating element should be stocked.

To obtain quick and accurate service when ordering spare parts kits, provide the following information:

(A) Pump model as noted on nameplate.

(B) Pump serial number as noted on nameplate.

(C) The name and number of the parts as shown on the sectional drawings for items not included in the parts kit.

(D) Quantity required of each item.

Assistance may be obtained from the Sterling Fluid Systems (USA), Inc. representative or an authorized distributor for planning an adequate supply of spare parts.

NOTICE: Materials of construction, specifications, dimensions, design features, and application information, where shown in this bulletin, are subject to change and/or modification without notice by Sterling at their option.

Peerless Pump Company
2005 Dr. Martin Luther King Jr. Street
Indianapolis, IN 46202
Phone: (317) 925-9661 · Fax: (317) 924-7388

The content of this manual is subject to change without notice. Copyright 1998 by Peerless Pump Company. Printed in U.S.A. 06982-2BB 4853854