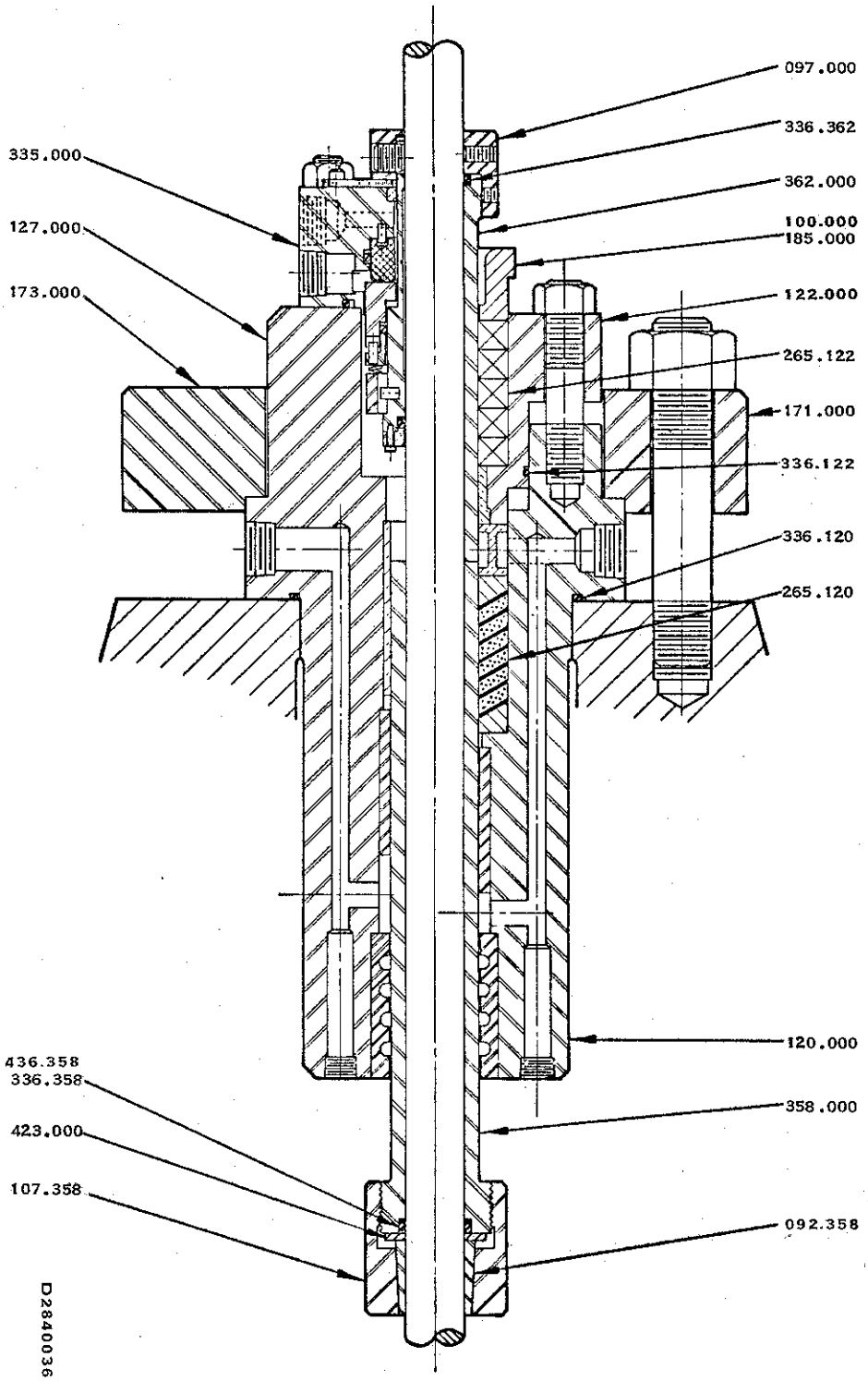

MECHANICAL SEAL AND RELATED PARTS

ITEM NO.	DESCRIPTION
092.358	Bushing, Taper Lock
107.358	Collar, Sleeve
127.000	Container, Seal
173.000	Flange, Seal Type
335.000	Seal, Mechanical
336.358	O-ring
358.000	Sleeve, Lower Removable
423.000	Washer, Lower Sleeve
436.358	Ring, Back-up

COMPRESSION PACKING PARTS

ITEM NO.	DESCRIPTION
092.358	Bushing, Taper-lock
097.000	Cap, Shaft Sleeve
100.000	Clamp, Packing Gland
107.358	Collar, Sleeve
120.000	Container, High-pressure
122.000	Container, Low-pressure
171.000	Flange, Packing Container
185.000	Gland, Split-type Packing
265.120	Packing, High-pressure
265.122	Packing, Low-pressure
336.120	O-ring
336.122	O-ring
336.358	O-ring
358.000	Sleeve, Lower Removable
362.000	Sleeve, Upper Removable
423.000	Washer, Lower Sleeve
436.358	Ring, Back-up

Fig. 6-3. Seal arrangement and packing arrangement, Model HP

1. Install the packing container per a, b, c, below, as applicable.

a. For Model HE and HF Pumps.

(See Fig. 6-1). Place the gasket (197.000) in position on the discharge head. Slide the packing container (126.000) down the shaft, seat it on the gasket, and fasten it to the discharge head with cap screws.

b. For Model HL, HM, and HH Pumps:

(See Fig. 6-2). Install an O-ring (336.126) in the groove in the cylindrical portion of the packing container (126.000). Slide the packing container over the shaft and into the discharge head, taking care not to pinch the O-ring against the edge of the hole. Place an O-ring (336.170) in the groove at the top of the packing container and a gasket (196.000) on the upper surface. Install the packing container flange (170.000), again being careful not to pinch the O-ring. Fasten the flange to the discharge head with nuts on the studs.

c. For Model HP Pumps:

(See Fig. 6-3). Install an O-ring (326.120) in the groove at the top of the cylindrical portion of the high-pressure packing container (120.000). Slide the high-pressure packing container down the shaft and over the lower wear sleeve (358.000) which was previously installed on the shaft. Seat the container on the discharge head, taking care not to pinch the O-ring against the edge of the hole. Install the packing container flange (171.000) as shown, and fasten it to the discharge head with nuts on the studs.

2. On pumps equipped with a shaft wear sleeve, install the sleeve at this time. High-pressure pumps require a two-part sleeve, as shown in Fig. 6-3. The lower part has already been installed (Section 5, Par. A. 9 or Par. B 2). Slide the sleeve (360.000, Fig. 6-2) or upper sleeve (362.000, Fig. 6-3) over the shaft. The upper sleeve is butted against the top of the lower sleeve. In installations which have a one-piece sleeve, position it approximately as shown in Fig. 6-2. Slide an O-ring (336.362) down the shaft and into the groove at the top of the sleeve. Install the sleeve cap (097.000, Fig. 6-2 or 6-3) and tighten the lower row of set-screws, fastening the cap to the sleeve. The upper setscrews, which fasten the cap to the shaft, must be left loose at this time.

NOTE

SINCE THE IMPELLER ADJUSTMENT AFFECTS THE POSITION OF THE SHAFT SLEEVE RELATIVE TO THE PACKING, A FINAL ADJUSTMENT OF THE SLEEVE ON THE SHAFT WILL BE MADE AFTER THE IMPELLER ADJUSTMENT. INSTRUCTIONS FOR ADJUSTING THE IMPELLERS ARE GIVEN IN SECTION 7.

3. To install a packing ring in the container, grease the ring on all sides and wrap it around the shaft, just above the container. A list of recommended greases, by brand name and manufacturer is given in Table 10-1.

CAUTION

DO NOT USE A GREASE WHICH COULD CONTAMINATE THE FLUID TO BE PUMPED OR WHICH IS SOLUBLE IN THE FLUID.

Using the fingers, start the ring into the container. Be sure that the ends of the ring do not butt together or overlap. When the entire ring is worked in flush with the top of the container, tamp it down into place using a hardwood stick and a hammer. The packing gland may be used as a tamper for the top-most ring.

NOTE

INSTALL ADJACENT PACKING RINGS WITH THE GAPS 180° APART. (ON OPPOSITE SIDES OF THE SHAFT.)

4. Be sure to install a lantern ring in the models for which one is shown in the appropriate figure.

5. In Model HP pumps, there are two sets of packing rings in series. (See Fig. 6-3.) When the high-pressure packing rings and the lantern ring are in place, the low-pressure packing container (122.000) will be installed in the top of the high-pressure container. Install an O-ring (336.122) in the groove in the cylindrical portion of the low-pressure container. Insert the low-pressure container into the high-pressure container (120.000), taking care not to pinch the O-ring on the edge of the hole. Install the nuts on the studs finger-tight only. They will be tightened when the final packing adjustment is made, after the pump has been started. Install the low-pressure packing rings (265.120) per Par. 2, above.

6. When the required number of packing rings is installed, install the split packing gland (185.000) in the packing container. Place the gland clamps (100.000) over the ends of the split gland to hold the two halves together. Install nuts on the gland studs, and turn them finger-tight only. Final adjustment of the packing gland is done after the pump is started. This procedure is explained in Section 9.

7. Slide the top shaft seal ring (318.000) over the shaft, and position it a short distance above the packing gland. (See Fig. 6-2.)

8. On pumps furnished with a grease fitting for lubrication of the packing, fill the packing container with grease.

B. Installing the Mechanical Seal Assembly (See Fig. 6-3 or 6-4):

WARNING

IN PUMPS WHICH WILL HANDLE FLAMMABLE, POISONOUS, OR CORROSIVE FLUIDS, AN ILL-FITTING AND IMPROPERLY ADJUSTED SEAL IS A SERIOUS SAFETY HAZARD. THE SEAL MANUFACTURER'S INSTRUCTIONS AND THE INSTRUCTIONS GIVEN HERE MUST BE VERY CAREFULLY FOLLOWED TO PREVENT LEAKAGE, WHICH MAY RESULT IN PROPERTY DAMAGE AND PERSONAL INJURY.

Before installing an O-ring in its groove, coat the O-ring with a film of liquid soap or rubber lubricant.

1. Place an O-ring in the groove in the cylindrical portion of the seal container (127.000). Install the seal container in the discharge head, taking care not to pinch the O-ring on the edge of the hole. If the seal container has an O-ring groove in its top surface (Fig. 6-4), install an O-ring in this groove. If a seal container flange

ITEM NO.	DESCRIPTION
127.000	CONTAINER, SEAL
173.000	FLANGE, SEAL CONTAINER
335.000	SEAL, MECHANICAL
336.173	O-RING, SEAL CONTAINER
336.127	O-RING, SEAL CONTAINER FLANGE

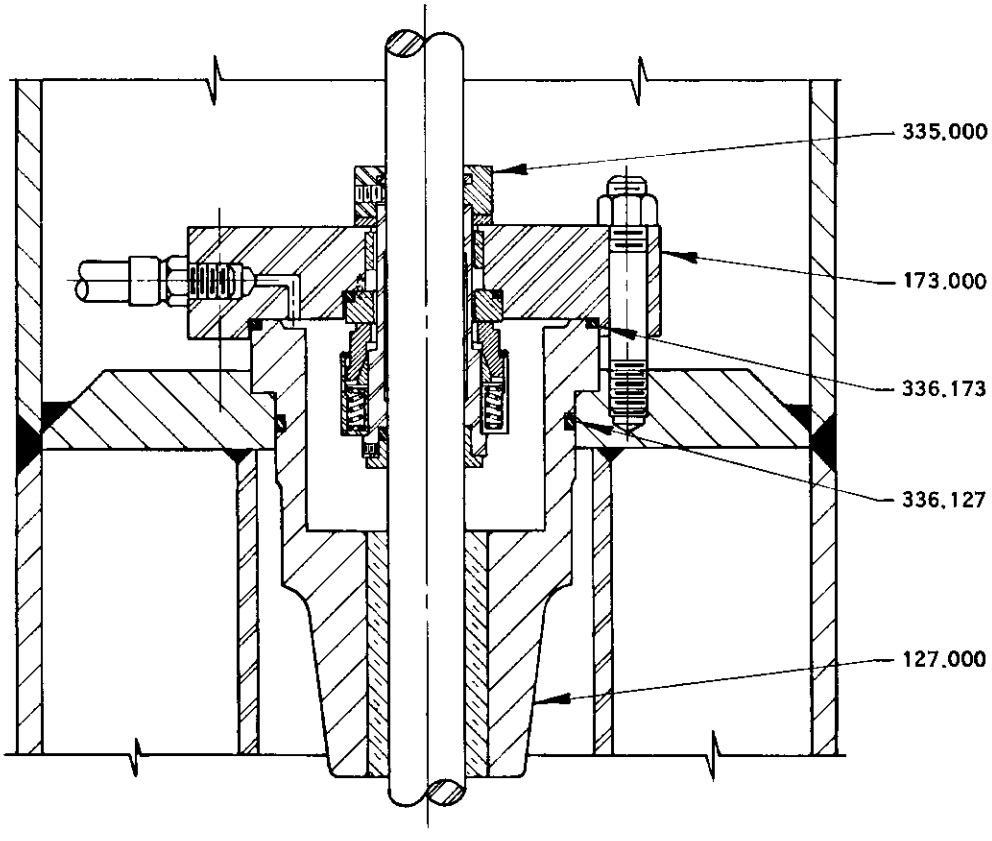

C2824338

Fig. 6-4 Seal Arrangement. Model HL, HM, HH, and HE.

ITEM NO.	DESCRIPTION
247.016	NIPPLE
249.016	PIPE
289.209	PLUG
412.016	VALVE
179.016	PRESSURE GAGE
409.016	UNION
390.016	TEE
432.016	ELBOW, 90°, THREADED

NOTE

WHEN GEAR DRIVE WITH OIL–COOLING SYSTEM IS USED, SEE FIG. 6–7

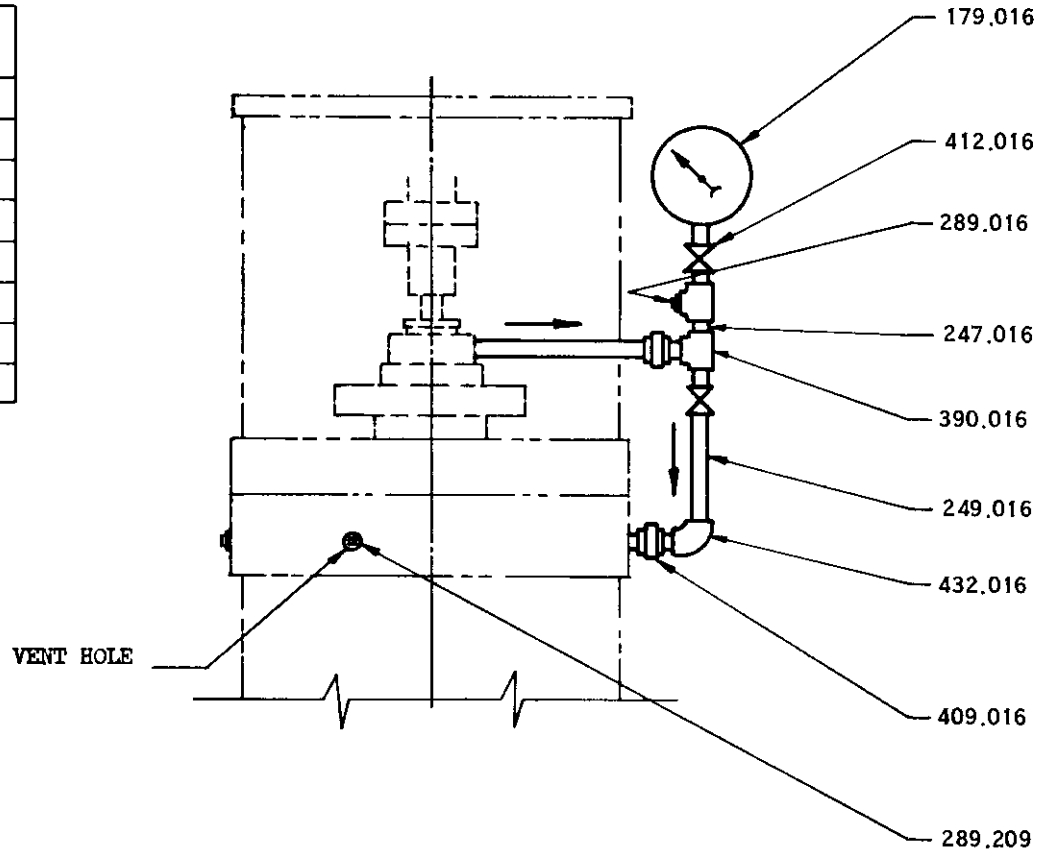

A2840697

Fig. 6-5. By-pass piping for seal or packing; single by-pass shown.

ITEM NO.	DESCRIPTION
247.016	NIPPLE
249.016	PIPE
289.016	PLUG
437.016	ORIFICE
412.016	VALVE
163.016	ELBOW: STREET
179.016	PRESSURE GAGE
409.016	UNION
390.016	TEE
438.016	ELBOW: 90°, THREADED

NOTE

WHEN GEAR DRIVE WITH OIL–COOLING SYSTEM IS USED, SEE FIG. 6–8

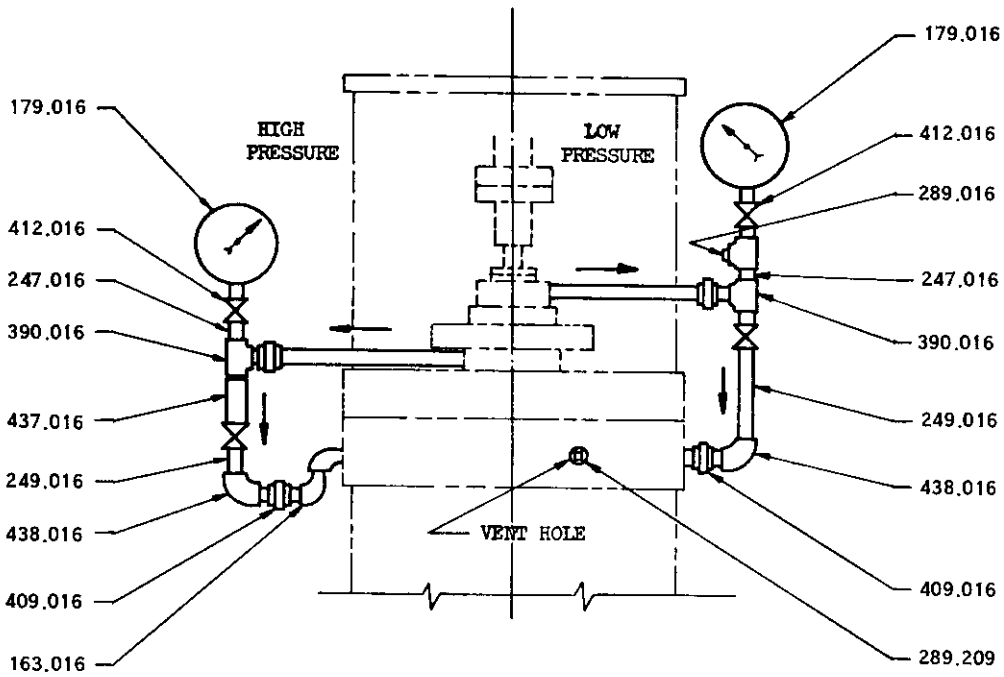

A2840696

Fig. 6-6. By pass piping for seal or packing; double by-pass shown.

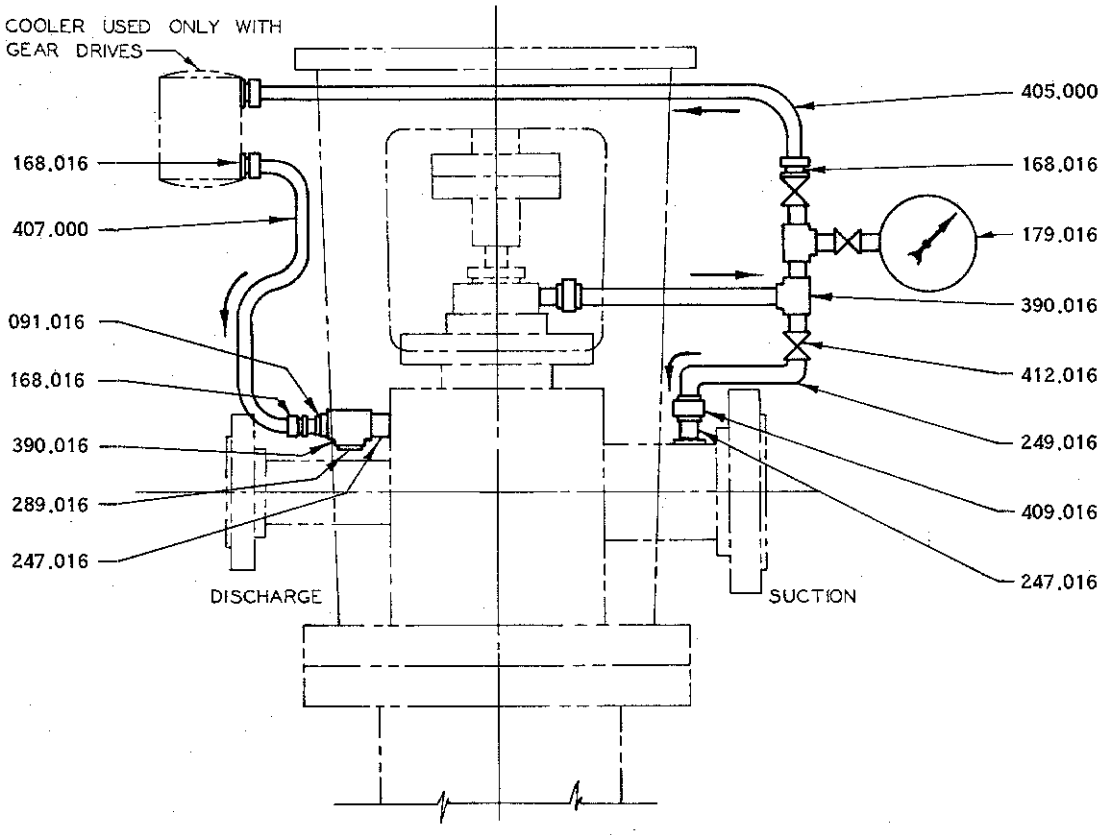

ITEM NO.	DESCRIPTION
247.016	NIPPLE
249.016	PIPE
289.016	PLUG
412.016	VALVE
405.000	INLET TUBE
407.000	OUTLET TUBE
091.016	REDUCING BUSHING
179.016	PRESSURE GAGE
409.016	UNION
168.016	MALE CONNECTOR
390.016	TEE

C2840073

Fig. 6-7. By-pass piping for seal or packing; single by-pass with oil-cooler shown.

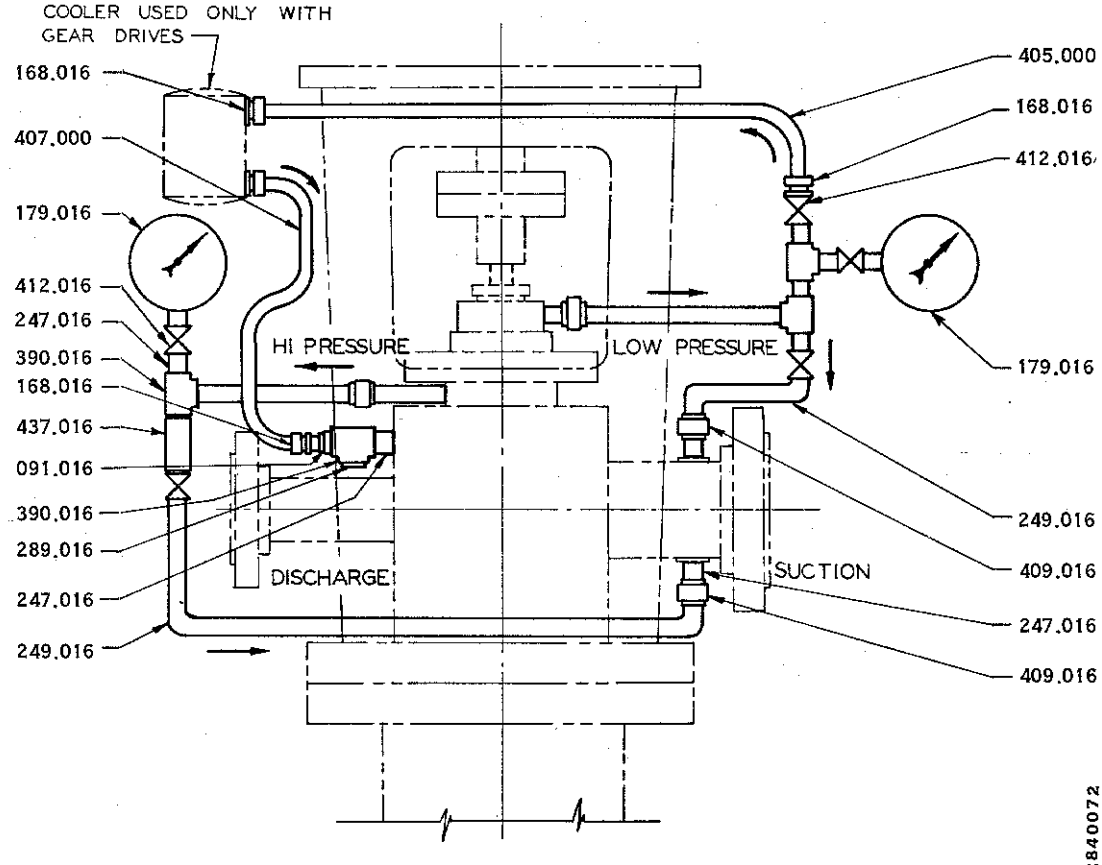

ITEM NO.	DESCRIPTION
247.016	NIPPLE
249.016	PIPE
289.016	PLUG
437.016	ORIFICE
412.016	VALVE
405.000	INLET TUBE
407.000	OUTLET TUBE
091.016	REDUCING BUSHING
179.016	PRESSURE GAGE
409.016	UNION
168.016	MALE CONNECTOR
390.016	TEE

C2840072

Fig. 6-8. By-pass piping for seal or packing; double by-pass with oil-cooler shown.

(173.000, Fig. 6-3) is provided, install this flange over the seal container and retain it with nuts on the studs protruding through the flange.

2. Install the mechanical seal (335.000) on the pump shaft per the manufacturer's instructions, which are furnished with the seal. To prevent damaging parts containing non-metallic seals when installing them on the shaft, cover the shaft threads with shim stock or tape.

NOTE

SINCE THE IMPELLER ADJUSTMENT AFFECTS THE POSITION OF THE SEAL, THE SEAL ADJUSTMENT (EXPLAINED IN THE SEAL MANUFACTURER'S INSTRUCTIONS) MUST BE MADE AFTER THE IMPELLER ADJUSTMENT. INSTRUCTIONS FOR ADJUSTING THE IMPELLERS ARE GIVEN IN SECTION 7.

C. Installing the By-Pass Piping

Pumps operating at very high pressures are equipped with by-pass piping at the packing or mechanical seal. Typical arrangements are shown in Fig. 6-5 through 6-8. Install pipe or tubing, fittings, and the gage per the appropriate figure. Note that in some cases the same tubing is used as part of an oil-cooling system for a gearhead-type driver.

CAUTION

DO NOT ATTACH RIGID PIPE TO A GEARHEAD. RIGID PIPE IS SUSCEPTIBLE TO LEAKING AT THE JOINTS IN THIS APPLICATION, DUE TO VIBRATION.

SECTION 7

INSTALLING THE DRIVER AND ADJUSTING THE IMPELLERS

The driver may be an electric motor or it may be a right angle gearhead coupled to an internal combustion engine or steam turbine. Electric motors used for driving vertical pumps are of two types: vertical solid-shaft motors and vertical hollow-shaft motors. Instructions for installing solid-shaft motors are given in Part A, below. Instructions for hollow-shaft motors are given in Part B. Part C gives instructions for installing gearheads. Procedures for adjusting impellers are given with the driver installation instructions.

ITEM NO.	DESCRIPTION
137.000	MOTOR-HALF-COUPLING
140.000	PUMP HALF-COUPLING
230.137	KEY
230.140	KEY
253.000	NUT, COUPLING ADJUSTING
317.137	SPLIT RING
326.137	CAP SCREW
326.253	CAP SCREW

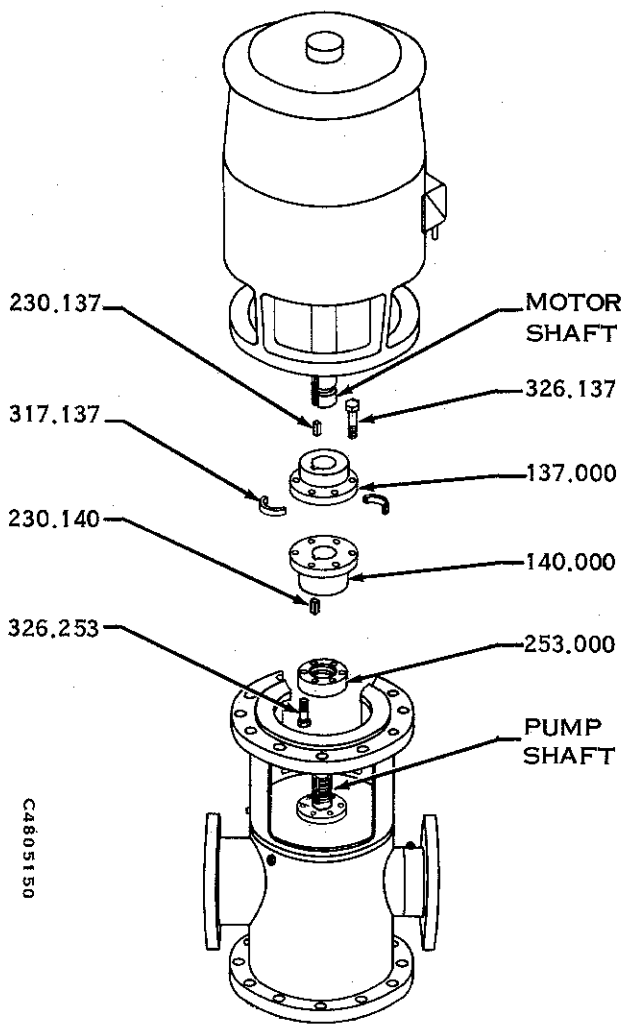

Fig. 7-1. A typical solid-state motor installation – exploded view. Plain flange coupling shown.

WARNING

AFTER THE MOTOR IS INSTALLED, DO NOT ATTEMPT TO LIFT THE ENTIRE PUMP BY THE LIFTING LUGS OF THE DRIVER. THESE LUGS AND THE BOLTS ATTACHING THE DRIVER TO THE PUMP CANNOT SUPPORT THE WEIGHT OF THE ENTIRE PUMP.

DO NOT ATTEMPT TO LIFT THE ENTIRE PUMP AND DRIVER BY SLINGING TO THE DISCHARGE HEAD. WITH THE DRIVER IN PLACE, THE CENTER-OF-GRAVITY MAY BE HIGHER THAN THE LIFTING POINTS. IN THIS SITUATION THE UNIT MAY TIP AS IT IS LIFTED, WHICH MAY RESULT IN SEVERE DAMAGE TO THE PUMP AND SURROUNDING STRUCTURE AND GRAVE INJURY TO NEARBY PERSONNEL.

A. SOLID-SHAFT MOTORS

A typical solid-shaft motor installation is shown in Fig. 7-1. The coupling between the motor shaft and the pump shaft may be a plain flange-type or a spacer-type (Fig. 7-2.) The latter is used only on units equipped with a mechanical shaft seal, to permit replacing the seal without lifting the motor. The parts involved in the installation are identified in the figures with item numbers which will be given in parentheses throughout the following paragraphs as they apply.

1. Install the adjusting nut (253.000) on the pump shaft, screwing it down to the bottom of the thread. Apply a thin film of oil to the pump shaft key (230.140) and insert it into the keyseat. Place the pump half-coupling (140.000) over the pump shaft and key; then slide it down until it rests on the adjusting nut.

2. Attach a sling to the lifting lugs of the motor, and hoist the motor to a convenient working height.

WARNING

DO NOT WORK UNDER A HEAVY SUSPENDED OBJECT UNLESS THERE IS A POSITIVE SUPPORT UNDER IT TO STOP ITS FALL IN EVENT OF SLING OR HOIST FAILURE. DISREGARD OF THIS WARNING COULD RESULT IN GRAVE PERSONAL INJURY OR DEATH.

Standing to the side of the motor, inspect the mounting surface, the register and the shaft extension. Clean these surfaces thoroughly. If any burrs are found, support the motor on two parallel timbers and remove the burrs with a smooth mill file, cleaning thoroughly afterward.

3. Apply a thin film of oil to the motor shaft key (230.137) and insert it into the keyseat. Place the motor half-coupling (137.000) over the motor shaft and key, sliding it up the shaft until the groove near the end of the shaft is exposed. Install the split ring (317.137) in the groove, and slide the motor half-coupling down over the ring to capture it.

4. Orient the motor with the conduit box in the desired direction and the mounting holes aligned. Lower the motor until the registers engage and the motor rests firmly on the discharge head. Install the motor mounting cap screws.

5. Lubricate the motor bearings per the instructions given on the lubrication plate attached to the motor case.

6. Make temporary wiring connections to the motor. The motor voltage rating is given on the nameplate. DO NOT USE ANY OTHER VOLTAGE.

CAUTION

MOTORS HAVING SPRING-LOADED SPHERICAL ROLLER BEARINGS MUST NOT BE ALLOWED TO RUN AT NORMAL SPEED WITHOUT A LOAD. WHEN CHECKING DIRECTION OF ROTATION, DO NOT HOLD THE SWITCH CLOSED – JUST "TAP" IT.

Momentarily close the circuit to the motor to check the direction of rotation. A large arrow on a plate affixed to the discharge head indicates the correct direction. For most pumps this is counter-clockwise, when viewed from above. HHU models, because of their inverted impellers, rotate clockwise, viewed from above. If the rotation is not correct, reverse it by changing the wiring connections to the motor. For a three-phase motor, interchange any two of the three leads. If the motor is singlephase, directions for reversing rotation are given on the nameplate. Mark the leads to indicate the correct connections.

WARNING

THE MOTOR MUST NOT BE TESTED FOR DIRECTION OF ROTATION WHEN COUPLED TO THE PUMP. IF THE PUMP SHOULD ROTATE IN THE WRONG DIRECTION, SERIOUS DAMAGE TO THE PUMP AND MOTOR AND GRAVE INJURY TO NEARBY PERSONNEL COULD RESULT.

7. Make the final connections to the motor, using the lead markings previously designated to ensure correct direction of rotation. If there is any doubt, recheck the rotation momentarily (see CAUTION above). All connections must be insulated in accordance with the local electrical code.

8. When a plain flange-type coupling is used (no spacer) install the cap screws (326.137) attaching the motor half-coupling to the pump half-coupling. The adjustment nut will be seated against the coupling later, when the impeller adjustment is made.

9. When a spacer- type coupling is used, place the spacer (363.000) in the register of the pump half-coupling, and fasten it with cap screws (326.363). Next install the cap screws (326.137) attaching the motor half-coupling to the spacer. The adjusting nut will be seated against the coupling later, when the impeller adjustment is made.

10. **CAUTION**

THE IMPELLERS MUST BE ADJUSTED BEFORE CONNECTING THE EXTERNAL PIPING.

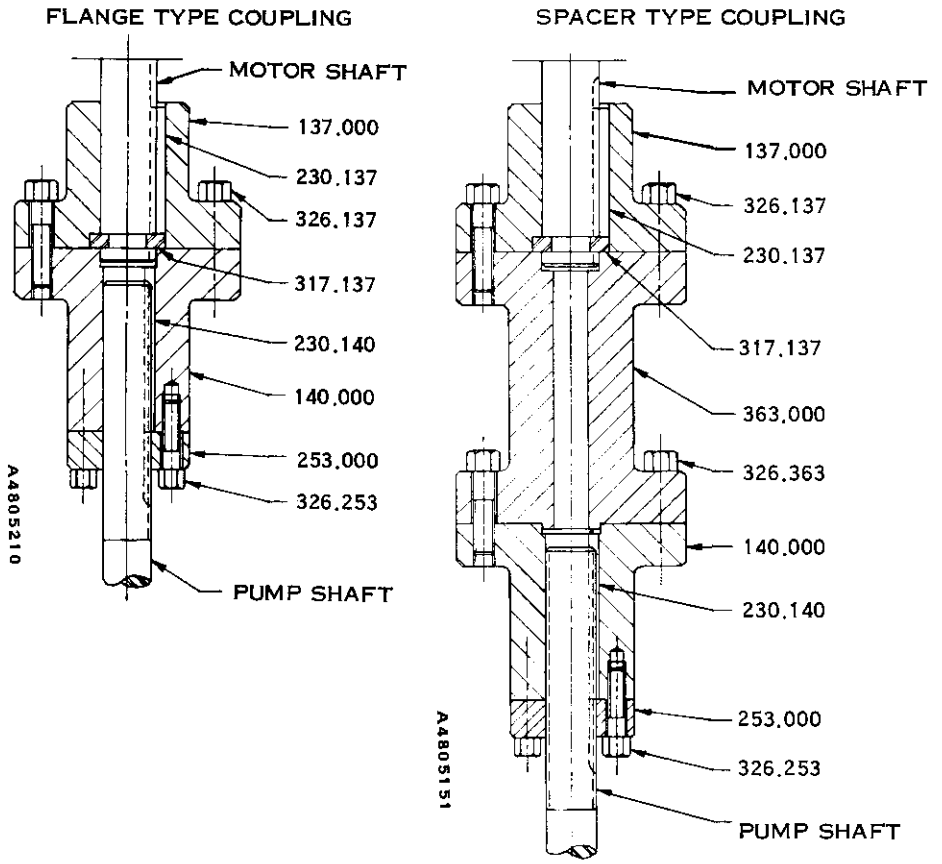

ITEM NO.	DESCRIPTION
137.000	Half-coupling, Motor
140.000	Half-coupling, Pump
230.137	Key, Motor Half-coupling
230.140	Key, Pump Half-coupling
253.000	Nut, Adjusting
253.259	Nut, Adjusting
259.000	Nut, Seal Collar Lock
317.137	Ring, Split
326.137	Cap Screw
326.253	Cap Screw
326.363	Cap Screw
332.259	Screw, Set
363.000	Spacer

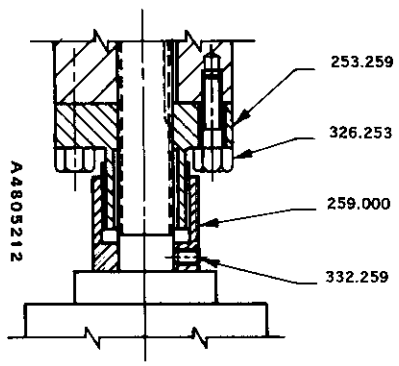

Special Installation
for Model HP only.

Fig. 7-2 Sectional views of couplings used with solid-shaft motors.

10. Before any adjustment is made, the impellers will be resting at their lowest position. The impellers will be moved upward to their most efficient position, which for most pumps requires a movement of 1/16 inch. When a pump requires an impeller clearance other than 1/16 inch, the correct dimension will be given in a sheet included with these instructions.

Rotate the adjusting nut (253.000) upward while holding the pump shaft until the gap between the upper face of the nut and the pump half-coupling (140.000) is equal to the impeller clearance dimension (1/16 inch unless otherwise specified). Rotate the nut an additional few degrees, if necessary, to align the clearance holes in the nut with the tapped holes in the pump half-coupling. Install the cap screws (326.253), tightening them gradually and uniformly. This will draw up the pump shaft the required amount to give the impellers the correct clearance.

11. On pumps which are equipped with a shaft packing, tighten the upper row of setscrews in the wear sleeve cap (097.000, Fig. 6-2 and 6-3). This retains the wear sleeve on the pump shaft.

CAUTION

FAILURE TO TIGHTEN THESE SETSCREWS WILL RESULT IN FAILURE OF THE O-RING AT THE TOP OF THE WEAR SLEEVE AND PREMATURE WEAR OF THE PUMP SHAFT.

12. On pumps which are equipped with a mechanical shaft seal, adjust the seal per the seal manufacturer's instructions. Be sure the setscrews in the top collar of the seal assembly are tightened. (See Fig. 6-3 and 6-4).

13. Model HP pumps equipped with mechanical seals have a special lock nut (259.000) to prevent upward movement of the seal collar. (See Fig. 7-2). When the impeller adjustment and mechanical seal adjustment have been completed, turn the seal collar lock nut downward until it is solidly against the top of the seal collar. Tighten the setscrews in the lock nut securely against the shaft.

CAUTION

FAILURE TO TIGHTEN THESE SETSCREWS WILL RESULT IN FAILURE OF THE SEAL AND PREMATURE WEAR OF THE PUMP SHAFT.

B. HOLLOW-SHAFT MOTORS

A typical hollow-shaft motor installation is shown in Fig. 7-3. Some pumps have a separate "top shaft" which extends through the motor and couples to the pump shaft a short distance above the shaft packing or seal.

1. Remove the motor cover, the gib key, and the top drive coupling. Attach a sling to the lifting lugs on the motor, and hoist the motor to a convenient working height.

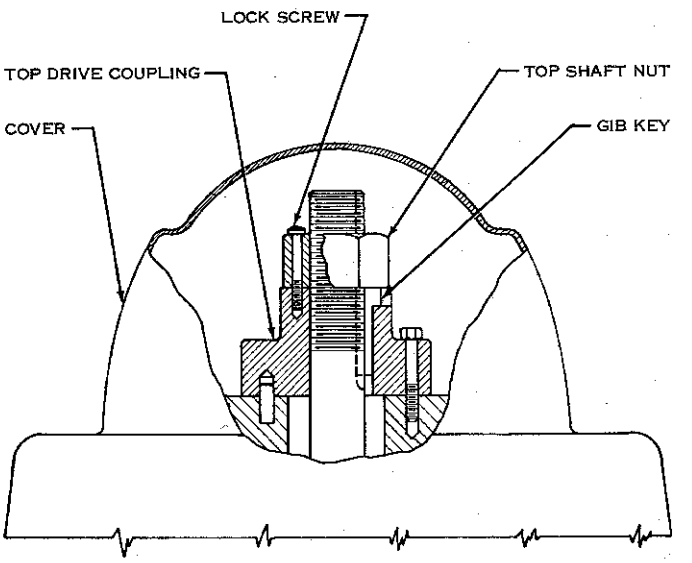

Fig. 7-3. Typical hollow-shaft motor or gearhead coupled to pump top shaft

WARNING

DO NOT WORK UNDER A HEAVY SUSPENDED OBJECT UNLESS THERE IS A POSITIVE SUPPORT UNDER IT TO STOP ITS FALL IN EVENT OF SLING OR HOIST FAILURE. DISREGARD OF THIS WARNING COULD RESULT IN GRAVE PERSONAL INJURY OR DEATH.

Standing to the side of the motor, inspect the mounting surface and register, and clean these surfaces thoroughly. If any burrs are found, support the motor on two parallel supports and remove the burrs with a smooth mill file, cleaning thoroughly afterward. If the motor is equipped with a steady bearing at the lower end of the hollow shaft, apply a film of turbine oil to the bearing surface.

2. Hoist the motor over the discharge head.

CAUTION

WHEN LOWERING THE MOTOR TO THE PUMP, TAKE CARE NOT TO BUMP OR SCRAPE AGAINST THE SHAFT PROTRUDING ABOVE THE DISCHARGE HEAD. THIS COULD RESULT IN BENDING OF THE SHAFT.

Lower the motor slowly, aligning the axial hole with the pump shaft so that there will be no bumping or scraping as the shaft enters and passes through the hole. If the pump is the type with a separate top shaft, this shaft will be inserted through the motor later, after the motor has been tested for direction of rotation. Orient the motor with the conduit box in the desired position and the mounting holes aligned with the mating tapped holes in the discharge head. Lower the motor until the resisters engage and the motor rests firmly on the discharge head. Install the motor-mounting cap screws and tighten them gradually and uniformly.

3. On pumps in which the pump shaft extends through the motor, check to see that the shaft is concentric with the hollow shaft of the motor, and that the motor rotor rotates freely when turned by hand. Eccentricity may be due to a bent shaft or, in the case of a pump with a column section, due to foreign particles between butting ends of shaft sections. The cause must be found and corrected before proceeding.

4. Lubricate the motor bearings per the instructions given on the lubrication plate attached to the motor case.

5. Make temporary wiring connections to the motor. The motor voltage rating is given on the nameplate. DO NOT USE ANY OTHER VOLTAGE.

CAUTION

MOTORS HAVING SPRING-LOADED SPHERICAL ROLLER BEARINGS MUST NOT BE ALLOWED TO RUN AT NORMAL SPEED WITHOUT A LOAD. WHEN CHECKING DIRECTION OF ROTATION, DO NOT HOLD THE SWITCH CLOSED –JUST "TAP" IT.

MOMENTARILY close the circuit to the motor to check the direction of rotation. A large arrow on a plate affixed to the discharge head indicates the correct direction. For most pumps this is counter-clockwise, when viewed from above. HHU models, because of their inverted impellers, rotate clockwise, viewed from above. If the rotation is not correct, reverse it by changing the wiring connections to the motor. For a three-phase motor, interchange any two of the three leads. If the motor is single-phase, directions for reversing rotation are given on the nameplate. Mark the leads to indicate the correct connections.

WARNING

THE MOTOR MUST NOT BE TESTED FOR DIRECTION OF ROTATION WHEN COUPLED TO THE PUMP. IF THE PUMP SHOULD ROTATE IN THE WRONG DIRECTION SERIOUS DAMAGE TO THE PUMP AND MOTOR AND GRAVE INJURY TO NEARBY PERSONNEL COULD RESULT.

6. In the case of a pump having a separate top shaft, the top shaft will be installed at this time. The procedure depends upon the type of coupling used.

a. For a plain coupling:

Wrap a clean rag tightly around the pump shaft, covering the packing gland or seal assembly. Clean the pump shaft thread and lubricate it with engine oil. Install a coupling on the shaft (L.H. thread) screwing it down for one-half its length. A fine wire inserted in the drilled hole at the center of the coupling can be used as a gage to determine when the coupling is correctly positioned. Be sure to remove the wire after installing the coupling. Slide the top shaft downward through the hollow shaft of the motor, and start it into the coupling (L.H. thread) by hand, then use a pair of pipe wrenches to screw the joint tight, butting the top shaft firmly against the pump shaft.

CAUTION

DO NOT STRIKE THE COUPLING WITH A HAMMER TO ASSIST IN MAKING THE JOINT. THIS CREATES LOCAL STRESSES WHICH MAY CAUSE CRACKING OF THE COUPLING WHEN TORQUE IS APPLIED DURING PUMP OPERATION.

File smoothly any burrs which may have been raised on the shaft, and wipe off metal chips with a clean rag. Remove the rag which was wrapped around the pump shaft.

b. For a locked-type coupling:

Wrap a clean rag tightly around the pump shaft, covering the packing gland or seal assembly. Clean the pump shaft thread and lubricate it with engine oil. Slip a coupling cap over the pump shaft, threaded end upward, allowing it to rest on the protective rag. (See Fig. 5-4). Install a coupling body on the shaft (L.H. thread), screwing it down for one-half its length. A fine wire inserted in the drilled hole at the center of the coupling can be used as a gage to determine when the coupling is correctly positioned. Be sure to remove the wire after installing the coupling.

Install a split ring in the groove in the pump shaft. Slide the coupling cap up the shaft, over the split ring, and screw it tightly onto the coupling body (R.H. thread). Slide the top shaft downward through the hollow shaft motor. Slip a coupling cap over the lower end of the top shaft, threaded end downward, and temporarily tie it or tape it to the shaft, above the retaining ring groove. Screw the top shaft into the coupling body, butting the end of the top shaft firmly against the end of the pump shaft (L.H. thread).

CAUTION

DO NOT STRIKE THE COUPLING WITH A HAMMER TO ASSIST IN MAKING THE JOINT. THIS CREATES LOCAL STRESSES WHICH MAY CAUSE CRACKING OF THE COUPLING WHEN TORQUE IS APPLIED DURING PUMP OPERATION.

Install a split ring in the groove in the top shaft. Lower the coupling cap over the split ring and screw it tightly onto the coupling body (R.H. thread). File smoothly any burrs which may have been raised on the shafts and wipe off all metal chips with a clean rag. Remove the rag which was wrapped around the pump shaft.

7. Make the final electrical connections to the motor, using the lead markings previously designated to ensure correct direction of rotation. If there is any doubt, recheck the rotation MOMENTARILY. All connections must be insulated in accordance with the local electrical code.

8. Install the top drive coupling over the pump shaft or top shaft, the holes in the bottom of the coupling engaging the pins protruding from the rotor hub or ratchet coupling. Align the keyways in the coupling and in the shaft, and insert the gib key. The key must fit snugly against the sides of the keyways but must have a slight clearance with the bottom of each keyway. File the key, if necessary, with a smooth mill file to obtain the proper fit. Apply a thin film of grease to the sides of the key before installing. Install the cap screws holding the coupling to the rotor hub or ratchet coupling.

9. Place the top shaft nut on the shaft and screw it down manually until it contacts the top drive coupling. Do not tighten the nut at this time. Do not install the lock screws at this time. This will be done later, after the adjustment of the impellers.

10. **CAUTION**

THE IMPELLERS MUST BE ADJUSTED BEFORE CONNECTING THE EXTERNAL PIPING.

Before any adjustment is made, the impellers will be resting at the lowest position. The impellers will be moved upward to their most efficient position, which for most pumps will require a movement of 1/16 inch. When a pump requires an impeller clearance other than 1/16 inch, the correct dimension will be given in a sheet incuded with these instructions.

Note the form and direction of the thread at the top of the shaft. If it is a square thread it is right-hand; if it is a vee thread it is left-hand.

Rotate the top shaft nut downward, while holding the pump shaft or top shaft, until the impellers just begin to clear and the shaft can be turned freely by hand. Scribe a line on the thread of the pump shaft or top shaft, flush with the top of the nut. Continue to turn the nut downward until the scribe line on the shaft has risen a distance equal to the impeller clearance dimension (1/16 inch unless otherwise specified). Rotate the nut an additional few degrees, if necessary, to align two of the clearance holes in the nut with tapped holes in the top drive coupling. Install the lock screws in the aligned holes. Replace the motor cover and fasten it with the nuts or cap screws which were earlier removed.

11. On pumps which are equipped with a shaft packing, tighten the upper row of setscrews in the wear sleeve cap (097.000, Fig. 6-2 and 6-3). This retains the wear sleeve on the pump shaft.

CAUTION

FAILURE TO TIGHTEN THESE SETSCREWS WILL RESULT IN FAILURE OF THE O-RING AT THE TOP OF THE WEAR SLEEVE AND PREMATURE WEAR OF THE PUMP SHAFT.

12. On pumps which are equipped with a mechanical shaft seal, adjust the seal per the seal manufacturer's instructions. Be sure the setscrews in the top collar of the seal assembly are tightened.

CAUTION

FAILURE TO TIGHTEN THESE SETSCREWS WILL RESULT IN FAILURE OF THE SEAL AND PREMATURE WEAR OF THE PUMP SHAFT.

C. GEARHEADS

A typical hollow-shaft gearhead is shown in Fig. 7-3 coupled to the pump.

1. Remove the gearhead cover and the top drive coupling. Attach a sling to the lifting lugs on the gearhead and pass the looped end of the sling over the hoist hook. Hoist the gearhead to a convenient working height.

WARNING

DO NOT WORK UNDER A HEAVY SUSPENDED OBJECT UNLESS THERE IS A POSITIVE SUPPORT UNDER IT TO STOP ITS FALL IN EVENT OF SLING OR HOIST FAILURE. DISREGARD OF THIS WARNING COULD RESULT IN GRAVE PERSONAL INJURY OR DEATH.

Standing to the side of the gearhead, inspect the mounting surface and register, and clean these surfaces thoroughly. If any burrs are found, support the gearhead on two parallel supports, and remove the burrs with a smooth mill file, cleaning thoroughly afterward.

2. Hoist the gearhead over the discharge head.

CAUTION

WHEN LOWERING THE GEAR HEAD TO THE PUMP TAKE CARE NOT TO BUMP OR SCRAPE THE SHAFT PROTRUDING ABOVE THE DISCHARGE HEAD. THIS COULD RESULT IN BENDING OF THE SHAFT.

Lower the gearhead slowly, aligning the axial hole with the pump shaft so that there will be no bumping or scraping as the shaft enters and passes through the hole. If the pump is the type with a separate top shaft, this shaft will be inserted through the gearhead later. Orient the gearhead with the input shaft in the required direction and mounting holes aligned with the mating tapped holes in the discharge head. Continue to lower the gearhead until the registers engage and the gearhead rests firmly on the discharge head. Install the cap screws in the mounting holes and tighten them gradually and uniformly.

3. On pumps in which the pump shaft extends upward through the gearhead, check to see that the shaft is concentric with the hollow shaft of the gearhead. Slide the top drive coupling over the top shaft. If the coupling freely engages the drive pins at the top of the gearhead, the top shaft is properly concentric. Eccentricity at this point may be due to a bent shaft, or, in the case of a pump with a column section, due to foreign particles between butting ends of shaft sections. The cause must be found and corrected before proceeding.

4. Some gearheads are equipped with an oil-cooling system which is supplied with cooling fluid from the pump or from an external source. Make cooling connections with tubing or rubber hose.

CAUTION

DO NOT USE RIGID PIPE FOR THIS PURPOSE. RIGID PIPE IS SUSCEPTIBLE TO LEAKING AT THE JOINTS IN THIS APPLICATION DUE TO VIBRATION.

If pump fluid is to be used as the coolant, connect a length of tubing and a flow-regulating valve between the inlet on the gearhead and the pipe tap at the top of the discharge outlet. Attach another tube from the cooling outlet on the gearhead to the pipe tap at the top of the suction inlet of the pump. In high-pressure pumps which are equipped with a bypass system for the shaft packing or seal, the gearhead cooling system can be combined with the bypass as shown in Fig. 6-7 and 6-8.

5. Fill the gearhead oil reservoir with a high grade of turbine oil. If oil is not furnished with the gearhead, consult the gearhead manufacturer's instruction manual for a suitable brand. Fill to the "full" mark on the sight gauge, if the gearhead is so equipped, or to a level just below the filler hole. Consult the manufacturer's instructions for frequency of oil change and other data on maintenance.

6. If the gearhead is driven by an alternating current electric motor, the motor must be tested for direction of rotation before proceeding with the installation. Follow the procedure of Part A, Par. 6, of this section.

7. In the case of a pump having a separate top shaft, the top shaft will be installed at this time. The procedure depends upon the type of coupling used.

a. For a plain coupling:

Wrap a clean rag tightly around the pump shaft, covering the packing gland or seal assembly. Clean the pump shaft thread and lubricate it with engine oil. Install a

coupling on the shaft (L.H. thread) screwing it down for one-half its length. A fine wire inserted in the drilled hole at the center of the coupling can be used as a gage to determine when the coupling is correctly positioned. Be sure to remove the wire after installing the coupling. Slide the top shaft downward through the hollow shaft of the motor, and start it into the coupling (L.H. thread) by hand, then use a pair of pipe wrenches to screw the joint tight, butting the top shaft firmly against the pump shaft.

CAUTION

DO NOT STRIKE THE COUPLING WITH A HAMMER TO ASSIST IN MAKING THE JOINT. THIS CREATES LOCAL STRESSES WHICH MAY CAUSE CRACKING OF THE COUPLING WHEN TORQUE IS APPLIED DURING PUMP OPERATION.

File smoothly any burrs which may have been raised on the shaft, and wipe off metal chips with a clean rag. Remove the rag which was wrapped around the pump shaft.

b. For a locked-type couplings:

Wrap a clean rag tightly around the pump shaft, covering the packing gland or seal assembly. Clean the pump shaft thread and lubricate it with engine oil. Slip a coupling cap over the pump shaft, threaded end upward, allowing it to rest on the protective rag. (See Fig. 5-4). Install a coupling body on the shaft (L.H. thread), screwing it down for one-half its length. A fine wire inserted in the drilled hole at the center of the coupling can be used as a gage to determine when the coupling is correctly positioned. Be sure to remove the wire after installing the coupling.

Install a split ring in the groove in the pump shaft. Slide the coupling cap up the shaft, over the split ring, and screw it tightly onto the coupling body (R.H. thread). Slide the top shaft downward through the hollow-shaft motor. Slip a coupling cap over the lower end of the top shaft, threaded end downward, and temporarily tie it or tape it to the shaft, above the retaining ring groove. Screw the top shaft into the coupling body, butting the end of the top shaft firmly against the end of the pump shaft (L.H. thread).

CAUTION

DO NOT STRIKE THE COUPLING WITH A HAMMER TO ASSIST IN MAKING THE JOINT. THIS CREATES LOCAL STRESSES WHICH MAY CAUSE CRACKING OF THE COUPLING WHEN TORQUE IS APPLIED DURING PUMP OPERATION.

Install a split ring in the groove in the top shaft. Lower the coupling cap over the split ring and screw it tightly onto the coupling body. (R.H. thread). File smoothly any burrs which may have been raised on the shafts and wipe off all metal chips with a clean rag. Remove the rag which was wrapped around the pump shaft.

8. Install the top drive coupling over the pump shaft or top shaft, the holes in the bottom of the coupling engaging the pins protruding from the gearhead hub or ratchet coupling. Align the keyways in the shaft and in the coupling, and insert the gib key. The key must fit snugly against the sides of the keyways but must have a slight clearance with the bottom of each keyway. File the key, if necessary, with a smooth mill file to obtain the proper fit. Apply a thin film of grease to the sides of the key before installing. Install the cap screws holding the coupling to the gearhead hub or ratchet coupling.

9. Place the top shaft nut on the shaft and screw it down manually until it contacts the top drive coupling. Do not install the lock screws at this time. This will be done later, after the adjustment of the impellers.

10. **CAUTION**

THE IMPELLERS MUST BE ADJUSTED BEFORE CONNECTING THE EXTERNAL PIPING.

Before any adjustment is made, the impellers will be resting at the lowest position. The impellers will be moved upward to their most efficient position, which for most pumps requires a movement of 1/16 inch. When a pump requires an impeller clearance other than 1/16 inch, the correct dimension will be given in a sheet included with these instructions.

Note the form and direction of the thread at the top of the shaft. If it is a square thread it is right-hand; if it is a vee thread it is left-hand. Rotate the top shaft nut downward, while holding the top drive coupling, until the impellers just begin to clear and the shaft can be turned freely by hand. Scribe a line on the thread of the pump shaft or top shaft, flush with the top of the nut. Continue to turn the nut downward until the scribe

line on the shaft has risen a distance equal to the impeller clearance dimension (1/16 inch unless otherwise specified). Rotate the nut an additional few degrees, if necessary. to align two of the clearance holes in the nut with tapped holes in the top drive coupling. Install the lock screws in the aligned holes. Replace the motor cover and fasten it with the nuts or cap screws which were earlier removed.

11. On pumps which are equipped with a shaft packing, tighten the upper set of setscrews in the wear sleeve cap (097.000, Fig. 6-2 and 6-3). This retains the wear sleeve on the pump shaft.

CAUTION

FAILURE TO TIGHTEN THESE SETSCREWS WILL RESULT IN FAILURE OF THE O-RING AT THE TOP OF THE WEAR SLEEVE AND PREMATURE WEAR OF THE PUMP SHAFT.

12. On pumps which are equipped with a mechanical shaft seal, adjust the seal per the seal manufacturer's instructions. Be sure the setscrews in the top collar of the seal assembly are tightened.

CAUTION

FAILURE TO TIGHTEN THESE SETSCREWS WILL RESULT IN FAILURE OF THE SEAL AND PREMATURE WEAR OF THE PUMP SHAFT.

SECTION 8

INSTALLING THE EXTERNAL PIPING

A. Install the suction and discharge piping.

CAUTION

THE SUCTION AND DISCHARGE PIPING MUST BE INDEPENDENTLY SUPPORTED SO THAT THEY DO NOT IMPOSE A LOAD ON THE DISCHARGE HEAD. IF THERE IS A DIFFERENCE IN OPERATING TEMPERATURE BETWEEN THE DISCHARGE PIPING AND THE HEAD, PROVISION MUST BE MADE IN THE INSTALLATION FOR DIFFERENTIAL EXPANSION. ANY STRESS TRANSMITTED TO THE DISCHARGE HEAD MAY CAUSE MISALIGNMENT AND SUBSEQUENT DAMAGE TO THE PUMP.

WARNING

FAILURE TO TIGHTEN THE SUCTION AND DISCHARGE JOINTS ADEQUATELY WILL CAUSE LEAKAGE. IN PUMPS HANDLING HAZARDOUS FLUIDS THIS COULD RESULT IN SERIOUS PROPERTY DAMAGE AND GRAVE PERSONAL INJURY.

B. A vapor vent is provided in the side of the discharge head at the highest point of the suction chamber. When it is necessary to bleed off vapor from the suction side of the pump, remove the pipe plug which normally seals this vent. IF THE VAPOR IS HAZARDOUS OR IF, FOR ANY OTHER REASON, IT IS UNDESIRABLE TO VENT TO ATMOSPHERE, INSTALL PIPING OR TUBING, WITH A SUITABLE SHUT-OFF VALVE, FROM THE VENT BACK TO THE FLUID SOURCE.

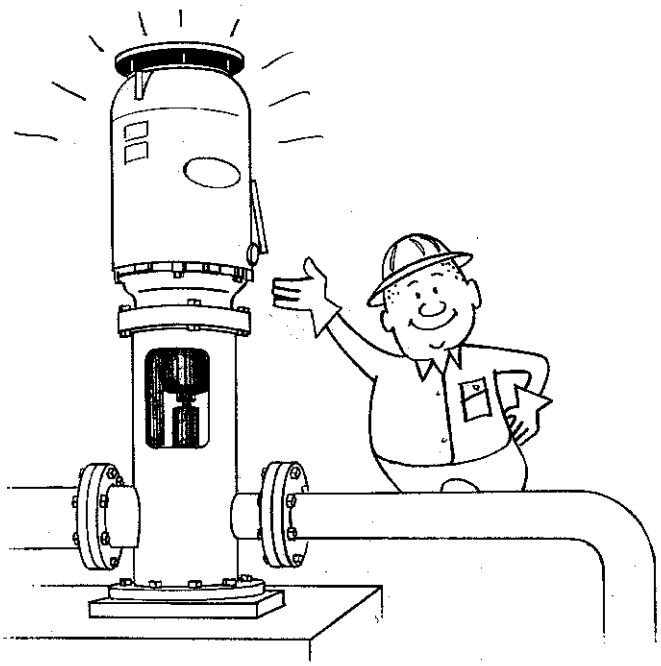

"Proper installation . . . will contribute to maximum efficiency and long trouble-free life."

C. This completes the installation of your Peerless Pump. If the foregoing procedure was carefully followed, the pump should now be ready for its first start .... but first, read Section 9. It gives important information on what to check before starting and certain adjustments to be made after starting.

SECTION 9

STARTING THE PUMP

A. Before attempting to start the pump, check the readiness of the following items:

Lubrication of grease fitting at the packing (if applicable)
Lubrication of the driver
Wiring of the electric motor (if applicable)
Installation of a prime mover and coupling device for the gearhead drive (if applicable)
Impeller adjustment
Oil-cooling connections for the driver (if applicable)
Setscrews in the wear sleeve cap of the packing assembly or in the top collar of the mechanical seal assembly. These setscrews must be tightened securely against the shaft.
Suction and discharge piping connections
Vapor vent and vapor by-pass piping (if applicable)

B. Start the flow of fluid into the suction side of the barrel before starting the pump. Hydro-Line pumps are lubricated by the pumped fluid, and require no external lubrication supply for the shaft bearings.

C. Start the pump. IF IT DOES NOT DISCHARGE FLUID IMMEDIATELY, SHUT OFF THE PUMP. Determine the cause and correct the problem before restarting. Likewise, if there is excessive vibration or if the driver overheats, stop the pump and correct the problem before restarting.

D. With the pump in operation, there will be some leakage at the top shaft packing. The packing gland must be adjusted to allow a controlled amount of leakage while maintaining the required pump discharge pressure. The correct leakage rate is approximately one drop per second. This amount of fluid passing through the packing will act as a lubricant and will carry off excessive heat of friction.

CAUTION

TOO TIGHT AN ADJUSTMENT OF THE PACKING GLAND CAN WEAR OUT THE PACKING IN ONLY A FEW MINUTES OF OPERATION AND MAY SERIOUSLY DAMAGE THE SHAFT.

E.

WARNING

WHEN MAKING A PACKING ADJUSTMENT, TAKE CARE TO KEEP THE HEAD, HANDS, AND CLOTHING AWAY FROM THE ROTATING SHAFT COUPLING. CONTACT WITH THE COUPLING COULD RESULT IN SERIOUS PERSONAL INJURY.

Adjust the packing gland in small increments. One-sixth to one-quarter turn of the gland nuts for each adjustment is recommended. Before making another adjustment, allow the packing to equalize against the increased pressure and the leakage to gradually decrease to a steady rate. The amount of adjustment required will vary with the fluid pressure at the packing. Never rush the break-in of the packing, even if it requires several days of attention to accomplish.

SECTION 10

MAINTENANCE

A. PERIODIC INSPECTION

Make a systematic inspection of the pump at regular intervals. The frequency required depends upon the operating conditions of the pump and its environment.

B. CLEANLINESS

Keep the driver and discharge head free from dirt, oil, and grease. Electric motors and starters should be kept as dry as possible. If exposed to dusty environments, motor ventilation passages should be cleaned periodically to prevent overheating.

C. LUBRICATION

A list of acceptable lubricants, by brand name and manufacturer, is given in Table 10-1.

CAUTION

DO NOT USE A LUBRICANT WHICH COULD CONTAMINATE THE FLUID TO BE PUMPED OR WHICH IS SOLUBLE IN THE FLUID.

1. Packing

The packing is supplied with grease through a pressure fitting on the side of the packing container. Apply one "shot" of grease with a grease gun after approximately every 100 hours of operation, or once per week to ten days.

2. Driver

Instructions for lubricating the driver are furnished by the driver manufacturer. Adherence to these instructions will benefit the user by long, trouble-free service.

D. PACKING MAINTENANCE

1. Adjustment

WARNING

WHEN MAKING A PACKING ADJUSTMENT, TAKE CARE TO KEEP THE HEAD, HANDS, AND CLOTHING AWAY FROM THE ROTATING SHAFT COUPLING. CONTACT WITH THE COUPLING COULD RESULT IN SERIOUS PERSONAL INJURY.

Adjust the packing gland whenever the leakage rate exceeds two drops per second.

CAUTION

TOO TIGHT AN ADJUSTMENT OF THE PACKING GLAND CAN WEAR OUT THE PACKING PREMATURELY AND SERIOUSLY DAMAGE THE SHAFT.

The packing adjustment is made with the pump running. One-sixth to one-quarter turn of the gland nuts for each adjustment is recommended. Before making another adjustment, allow the packing to equalize against the increased pressure and the leakage to gradually decrease to a steady rate. The recommended leakage rate is approximately one drop per second.

2. Replacement

a. When the packing has been compressed to the point that the gland is about to contact the upper face of the packing container, remove the gland, add one extra packing ring, and re-adjust. If this fails to reduce the leakage to one drop per second, remove all of the packing rings and repack with new rings. (See Section 6.)

b. If the replacement packing is in the form of a continuous coil or rope, it must be cut into rings before installing. This can be done by tightly wrapping one end of the packing material around the top shaft like one coil of a coil spring and marking the coil with a sharp knife. Each ring must have a gap of 1/16 to 1/8 inch, and the ends must be parallel. After cutting on the mark, the length of packing may be used as a template for cutting all the other rings.

c. Install the new packing rings per Section 6. Instructions for adjusting a new packing are given in Section 9, Par. D and E.

E. REPLACEMENT OF MECHANICAL SEAL

These seals are not made by the pump manufacturer. For information on mechanical seals, consult the seal manufacturer's instructions, which are provided with the pump.

F. TROUBLE DIAGNOSIS

Table 10-2 lists a number of possible trouble sources, their causes, and an effective remedy for each.

G. REPAIR OF BOWLS

See Bulletin 2633123.

TABLE 10-1. Greases for lubrication of lineshaft bearing, suction manifold bearings, and shaft packing. 3600 RPM maximum. -20°F. TO + 120°F.

NOTE: Other products, not listed here but of equal quality, may also be used.

MANUFACTURER	PRODUCT
AMERICAN OIL CO.	AMOCO LITHIUM GREASE ALL–WEATHER
ATLANTIC RICHFIELD CO.	ARCO MULTIPURPOSE GREASE
CATO OIL & GREASE CO.	MYSTIK JT–6
CITIES SERVICE OIL CO.	CITGO H–2
CONTINENTAL OIL CO.	EP CONOLITH NO. 1 (-20° TO + 40° F.) EP CONOLITH NO. 2 (+ 40°F. TO + 120°F.)
GULF OIL CO.	GULF CROWN GREASE NO. 2 OR GULF SUPREME GREASE NO. 2
E. F. HOUGHTON CO.	COSMOLUBE NO. 2
HUMBLE OIL & REFINING CO.	LIDOK NO. 2
HYDROTEX	DELUXE NO. M–33 SUPER SHIELD
IMPERIAL OIL & GREASE CO.	MOLUB–ALLOY NO. 1
KEYSTONE DIV., PENNWALT CORP.	80 X LT
MOBIL OIL CORP.	MOBILUX NO. 2
THE PENNZOIL CO.	PENNZOIL 705 HDW
PHILLIPS PETROLEUM CO.	PHILUBE IB & RB
SHELL OIL CO.	ALVANIA EP GREASE 2 OR ALVANIA EP GREASE 1 (FOR PROLONGED AMBIENT BELOW 0°F.)
SUN OIL CO.	SUNAPLEX NO. 2 EP PRESTIGE 42
SOUTHWEST GREASE & OIL CO.	CODE 11234 MULTI–LUBE NO. 2 STABL–LUBE NO. 2
TEXACO, INC.	NOVATEX GREASE NO. 2
UNION OIL CO.	UNOBA EP–2

TABLE 10-2

TROUBLE CHART

TROUBLE SOURCE	PROBABLE CAUSE	REMEDY
CROOKED SHAFT	BENT IN HANDLING	REPLACE SHAFT OR HAVE IT STRAIGHTENED
WEAR ON SHAFT AT SEALS	NATURAL WEAR, CORROSIVE ACTION	REPLACE SHAFT
UNEVEN WEAR ON BEARINGS	MISALIGNMENT ON SHAFT	REPLACE BEARINGS AND STRAIGHTEN OR REPLACE SHAFT
UNIFORM WEAR ON BEARINGS	ABRASIVE ACTION	REPLACE BEARINGS
LATERAL SEAL RING WEAR	ABRASIVE ACTION	REPLACE SEAL RINGS
WEAR ON SIDE SEAL AND IMPELLER SKIRT	ABRASIVE ACTION	APPLY WEAR RINGS TO IMPELLER SKIRT AND SIDE SEAL IF DAMAGE TO BOWL AND IMPELLER NOT TOO GREAT
WEAR ON BOWL VANES AND OUTSIDE WALL	ABRASIVE ACTION	REPLACE BOWLS IF WEAR IS EXCESSIVE
WEAR ON IMPELLER VANES AND SHROUD	ABRASIVE ACTION	REPLACE IMPELLERS IF WEAR IS EXCESSIVE

SECTION II

DISASSEMBLING THE PUMP

WARNING

DO NOT ATTEMPT TO LIFT THE ENTIRE PUMP BY THE LIFTING LUGS OF THE DRIVER. THESE LUGS AND THE BOLTS ATTACHING THE DRIVER TO THE PUMP CANNOT SUPPORT THE WEIGHT OF THE ENTIRE PUMP.

DO NOT ATTEMPT TO LIFT THE ENTIRE PUMP AND DRIVER BY SLINGING TO THE DISCHARGE HEAD. WITH THE DRIVER IN PLACE, THE CENTER OF GRAVITY MAY BE HIGHER THAN THE LIFTING POINTS. IN THIS SITUATION THE UNIT MAY TIP AS IT IS LIFTED, WHICH MAY RESULT IN SEVERE DAMAGE TO THE PUMP AND SURROUNDING STRUCTURE AND GRAVE INJURY TO NEARBY PERSONNEL.

A. Clean an area adjacent to the pump site as a storage space for pump parts as they are disassembled. Arrange parallel timbers on the floor in the cleared area to support the bowl unit and column (if applicable) horizontally.

B. Disconnect the suction and discharge piping from the pump. Remove the pressure by-pass piping and valves, if applicable, between the packing or seal assembly and the discharge head. Disconnect the vapor by-pass piping, if applicable, from the discharge head. If the driver is equipped with an oil-cooling system, remove the external tubing used for this purpose. On pumps which are driven through a gearhead, remove the coupling or drive shaft between the gearhead and the prime mover. In the case of an electric motor drive, remove the electrical connection at the conduit box.

WARNING

BEFORE OPENING THE CONDUIT BOX OF AN ELECTRIC MOTOR, BE CERTAIN THAT THE CURRENT TO THE MOTOR IS SHUT OFF. AN ELECTRICAL SHOCK FROM CONTACT WITH LIVE MOTOR LEADS CAN BE FATAL.

C. Uncouple the driver from the pump shaft. The procedure depends upon the type of driver used.

1. For a hollow-shaft motor or gearhead:

(See Fig. 7-3) Remove the cover. Remove the lock screws from the top shaft nut. Note the form and direction of the thread at the top of the pump shaft. If it is a square thread it is right-hand; if it is a vee thread it is left-hand. Remove the top shaft nut, the gib key, and the top drive coupling.

2. For a solid-shaft motor:

(See Fig. 7-1 & 7-2). Remove the cap screws (326.253) in the adjusting nut (253.000) and the cap screws (326. 137) in the motor half-coupling (137.000). Rotate the adjusting nut down to the bottom of the shaft thread. If there is a spacer (363.000) between the motor half-coupling and pump half-coupling (140.000), remove the cap screws (326.363) attaching it to the pump half-coupling, and remove the spacer. Slide the motor half-coupling upward to remove the split ring (317.137); then slide the motor half-coupling downward to remove it from the shaft. Remove the key (230.137) from the motor shaft. Raise the pump half-coupling from the pump shaft and remove the key (230.140).

D. If the pump has a short "top shaft" which extends through the motor and couples to the pump shaft inside the discharge head, remove this shaft. The procedure varies with the type of coupling.

NOTE

THE COUPLING THREADS ARE LEFT HAND.

CAUTION

DO NOT STRIKE THE COUPLING WITH A HAMMER TO ASSIST IN LOOSENING THE JOINT. THIS CREATES LOCAL STRESSES WHICH MAY CAUSE CRACKING OF THE COUPLING WHEN TORQUE IS APPLIED DURING SUBSEQUENT PUMP OPERATION.

1. For a plain coupling:

Unscrew the top shaft from the coupling. File smoothly any burrs which may have been raised on the shaft and wipe off any metal chips with a clean rag.

2. For a locked-type coupling:

(See Fig. 5-4). Unscrew the upper cap from the coupling body. These threads are conventional right-hand threads. Remove the split ring from the end of the top shaft. Unscrew the top shaft from the coupling (L.H. thread). File smoothly any burrs which may have been raised on the shaft, and wipe off any metal chips with a clean rag.

E. **WARNING**

DO NOT WORK UNDER A HEAVY SUSPENDED OBJECT UNLESS THERE IS A POSITIVE SUPPORT UNDER IT TO STOP ITS FALL IN EVENT OF SLING OR HOIST FAILURE. DISREGARD OF THIS WARNING COULD RESULT IN GRAVE PERSONAL INJURY OR DEATH.

Remove the driver mounting screws. Attach the hoist sling to the lifting lugs of the driver, and lift it off the discharge head. Place the driver on clean wooden blocks in the storage area.

F. If the pump shaft is equipped with a shaft seal ring (Item 318.000, Fig. 6-1 and 6-2) above the packing, remove this ring by sliding it up over the top of the shaft.

G. The next step is to disassemble the shaft packing or mechanical seal. Separate instructions are given below for pumps with packings (Part 1) and for pumps using mechanical seals (Part 2).

1. Disassembling the Packing Assembly.

(See Fig. 6-1, 6-2, or 6-3). Remove the gland-retaining bolts or nuts and the two gland clamps (100.000). Lift off the split gland (185.000). If the pump is equipped with a removable packing sleeve (wear sleeve), remove the cap (097.000). Pull out the packing rings, using a special packing removal tool or a hooked pointed wire. Some high-pressure pumps have two sets of packings. (See Fig. 6-3). When the upper packing rings have been pulled out, remove the low-pressure packing container (122.000) which serves as a gland for the packing below. If the packing assembly includes a lantern ring, a compression spring, a washer, or a bushing, remove these. Be sure to remove any packing rings that may be below the lantern ring. Remove the nuts or cap screws retaining the packing container (126.000) or the high-pressure packing container (120.000); then lift off the packing container flange (170.000 or 171.000), if applicable, and remove the packing container. Remove the packing container gasket (197.000, if applicable). Slide off the removable packing sleeve, if the pump is so equipped.

2. Disassembling the Mechanical Seal.

Disassemble the mechanical seal per the seal manufacturer's instructions, which were furnished with the seal.

H. Remove the cap screws holding the discharge head to the barrel flange. Place two eyebolts diametrically opposite in the upper face of the discharge head; then attach the sling to the eyebolts and to the hoist hook. Lift the pump straight upward until the lower flange of the discharge head is at a comfortable working height above the foundation. Remove only enough bolts from opposite sides of the flange to accommodate a box-type clamp. Place the box clamp on the foundation so that the two parallel members are directly below the areas of the flange where the bolts were removed. Lower the pump, allowing it to rest on the box clamp. Remove the remaining bolts attaching the discharge head and lift it from the pump.

CAUTION

WHEN RAISING THE DISCHARGE HEAD, TAKE CARE NOT TO BUMP OR SCRAPE THE SHAFT EXTENDING THROUGH IT.

Place the discharge head on clean wooden blocks in the storage area.

J. If the pump is extra-long, it will have a cylindrical column between the discharge head and the bowl unit. The column may be in one section or more. (See Fig. 1-4). The impeller shaft may extend through the column to the discharge head, or there may be another shaft, called the top shaft, coupled to the impeller shaft just above the bowl unit. In some cases a third shaft (the column shaft) is coupled between the impeller shaft and the top shaft. Par. K through O give instructions for removing the column.

These instructions assume that a top shaft or column shaft is being removed with the column section. If this does not apply to the pump in question, merely disregard the directions dealing with shaft removal. For pumps which do not have a column, proceed with Par. P for the removal of the bowl unit.

K. If the pump has a bearing retainer nested in the upper flange of the column, remove the bearing retainer by sliding it up over the top of the shaft. (See Fig. 5-6).

L. Place two eyebolts diametrically opposite in the upper flange of the top column section. Attach the sling to the eyebolts and to the hoist hook. Tie the upper end of the protruding pump shaft to the hoist hook with a suitable tail rope. (See Section 5, Par. A.2, and Fig. 5-3). Allow about two feet of slack in the rope. Remove the box clamp and lift the pump straight upward until the lower flange of the top column section is a comfortable working height above the foundation.

M. Remove bolts from opposite sides of the flange, as was done earlier, and place the box clamp on the foundation as before. Lower the pump, allowing it to rest on the box clamp. Remove the remaining bolts. Lift the top column section until most of the slack is out of the tail rope supporting the shaft.

Place over the top of the next lower column section or bowl unit (as applicable) a specially made wood or metal apron which covers the opening and fits closely around the shaft. Wrap a clean rag tightly around the shaft, over the apron. (See Fig. 5-2). This will prevent entry of foreign matter into the bearing and pump. Uncouple the lineshaft per the instructions in Par. D.1 (plain threaded coupling) or Par. D.2 (locked-type coupling).

N. Lift the column and shaft as an assembly and deposit the assembly on the parallel timbers in the storage area.

O. Remove any additional column sections and shafts in the same manner.

P. Place two eyebolts diametrically opposite in the upper flange of the bowl unit, which is resting on the box clamp. Attach the sling to the eyebolts and to the hoist hook. Remove the box clamp and lift the bowl unit straight upward out of the barrel. Place the bowl unit on the parallel timbers in the storage area. As the unit is lowered, the lower end must be guided manually to prevent bumping or dragging.

LaBour Taber

Peerless Pump Company
2005 Dr. Martin Luther King Jr. Street
Indianapolis, IN 46202
Phone: (317) 925-9661 • Fax: (317) 924-7388